RADIATOR UPPER SUPPORT (ASSY)

REPLACEMENT

1. REMOVE RADIATOR UPPER SUPPORT

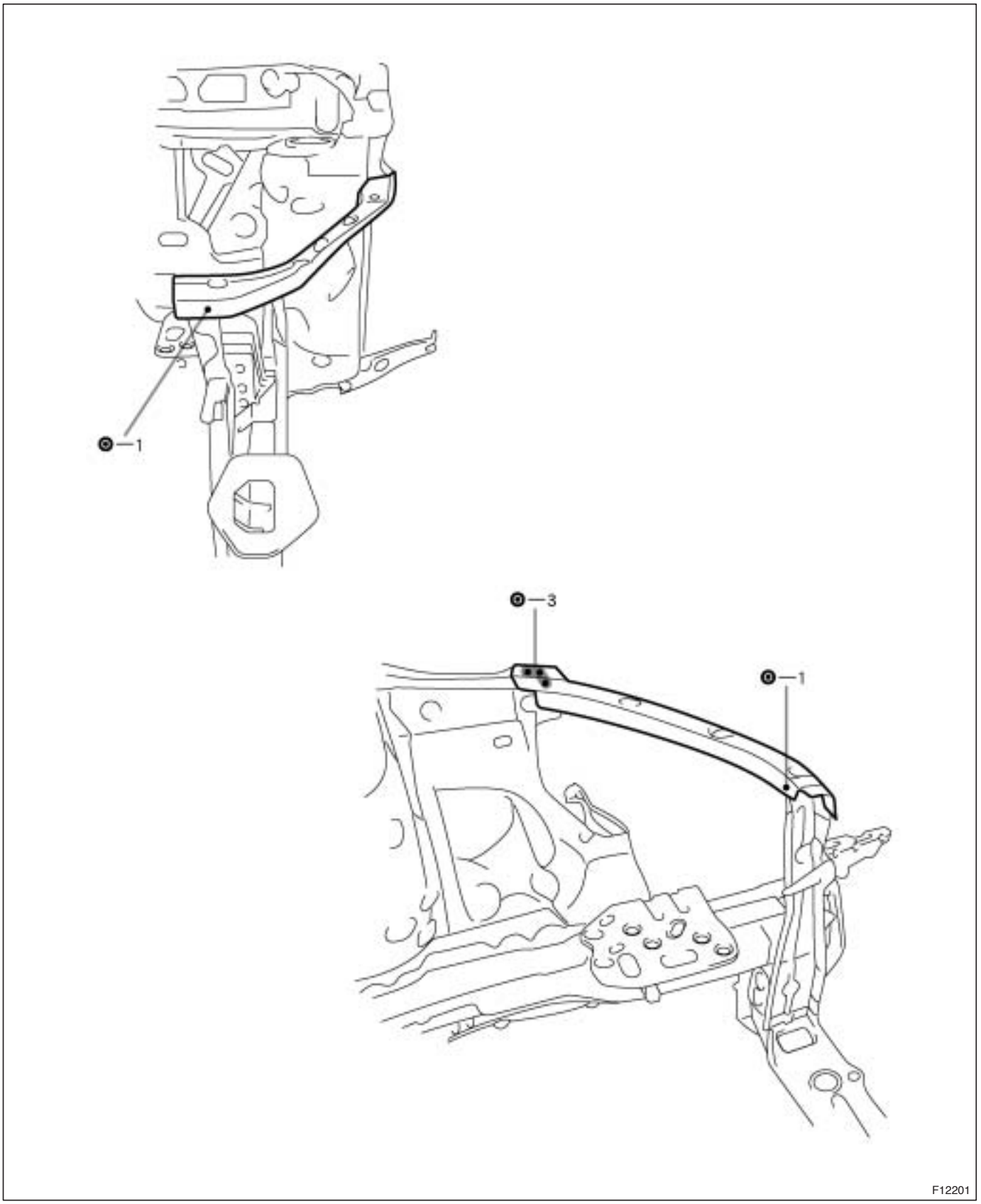

2. INSTALL RADIATOR UPPER SUPPORT

(a) Temporarily install the new parts and measure each part in accordance with the body dimension diagram.

HINT:
First install the radiator upper center support.

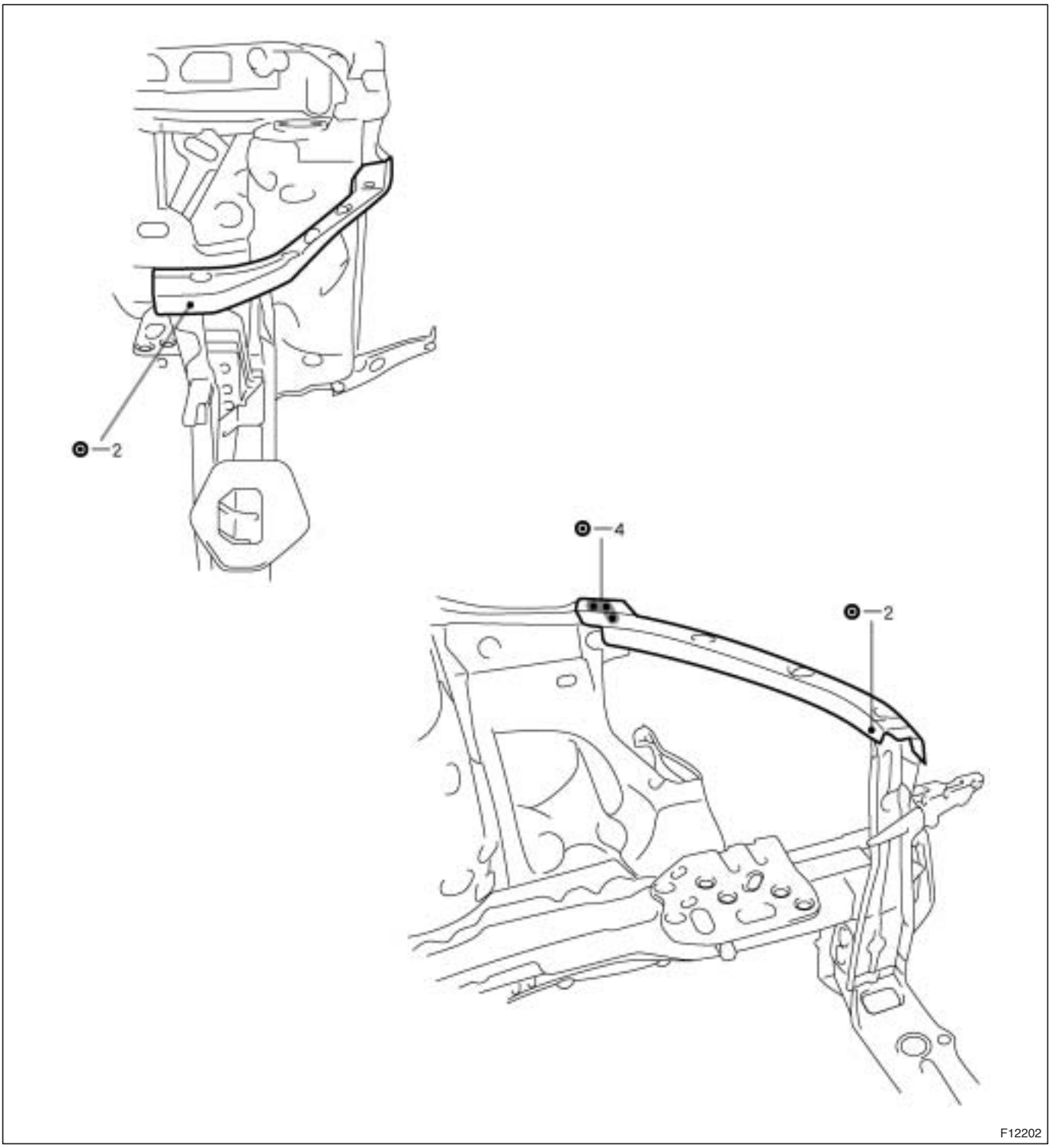

3. MEASURING THE ENGINE COMPARTMENT DIMENSIONS (See page BP-94).

4. APPLYING ANTI-RUST AGENT

(a) After applying the top coat layer, apply the anti-rust agent to the inside of the necked section structural weld spots.

RADIATOR SUPPORT UPPER BRACE (ASSY)

REPLACEMENT

1. **REMOVE RADIATOR UPPER SUPPORT (See page BP-1)**
2. **REMOVE RADIATOR SUPPORT UPPER BRACE**

(a) Replace the front bumper stay and radiator stay bracket at the same time.

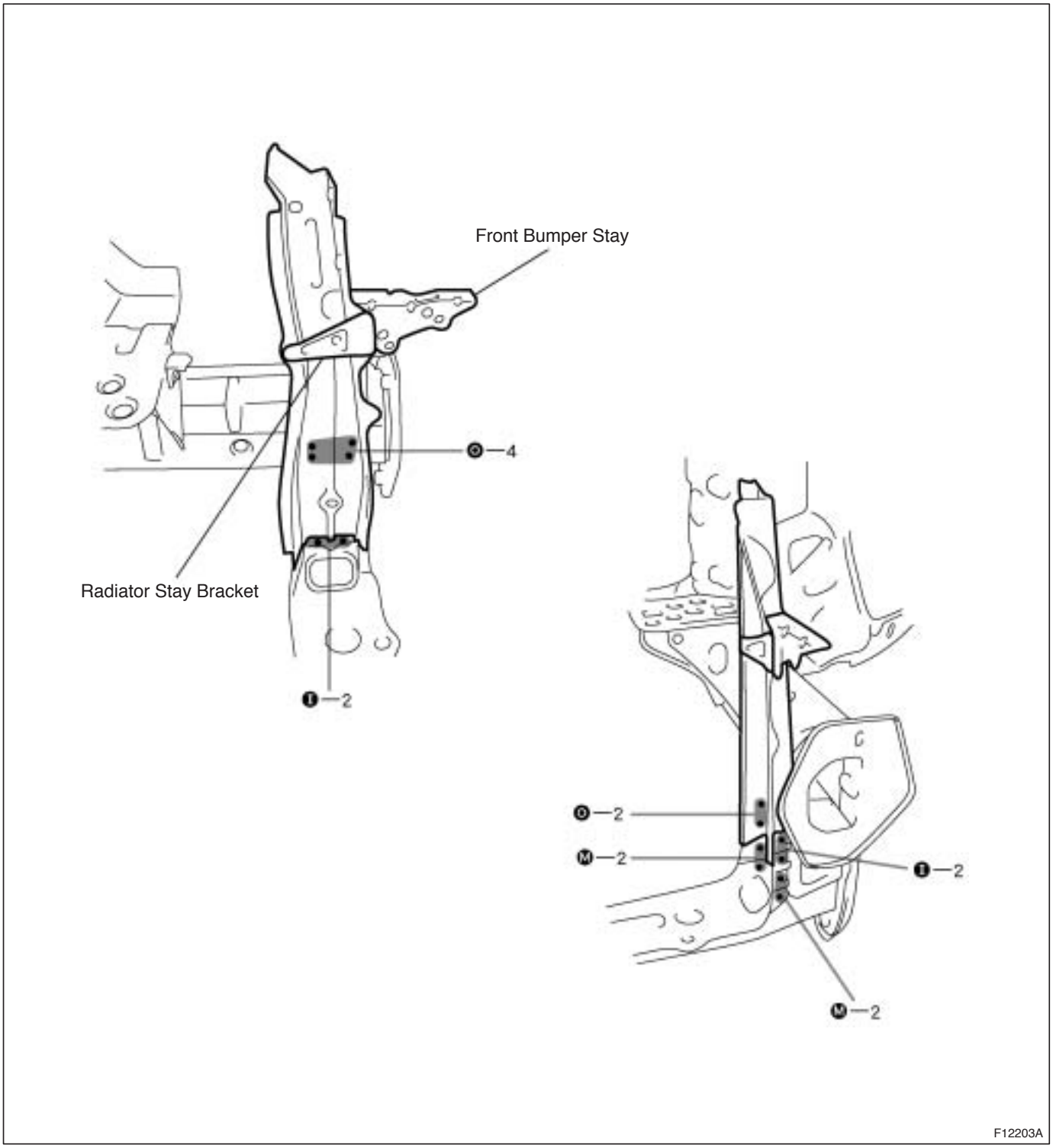

3. INSTALL RADIATOR SUPPORT UPPER BRACE

(a) Temporarily install the new parts and measure each part in accordance with the body dimension diagram.

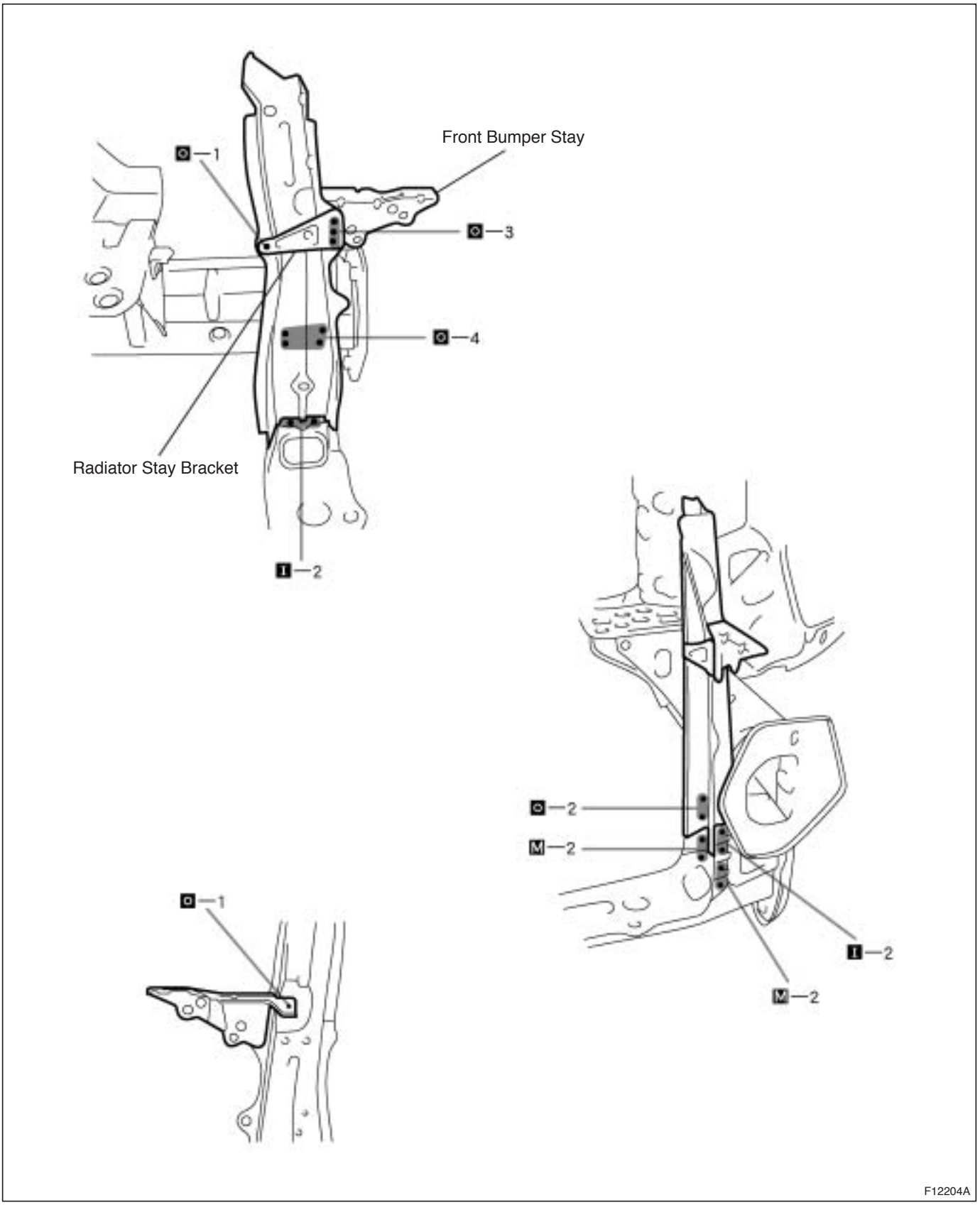

F12204A

4. MEASURING THE ENGINE COMPARTMENT DIMENSIONS (See page BP-94)

5. INSTALL RADIATOR UPPER SUPPORT (See page BP-1)

6. APPLYING ANTI-RUST AGENT

(a) After applying the top coat layer, apply the anti-rust agent to the inside of the necked section structural weld spots.

FRONT CROSSMEMBER (ASSY)

REPLACEMENT

1. REMOVE FRONT CROSSMEMBER

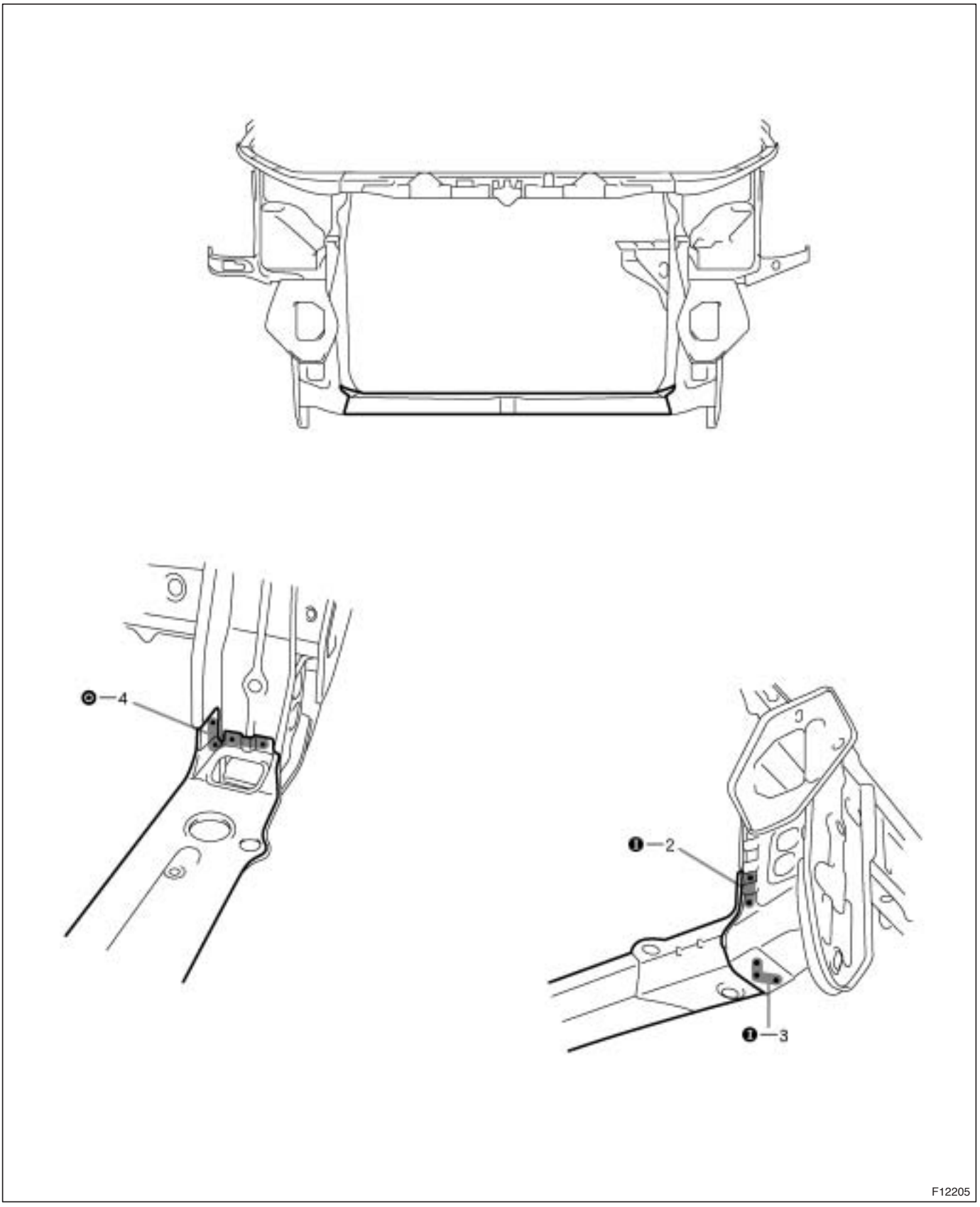

2. INSTALL FRONT CROSSMEMBER

(a) Temporarily install the new parts and measure each part in accordance with the body dimension diagram.

HINT:
First install the hood lock support.

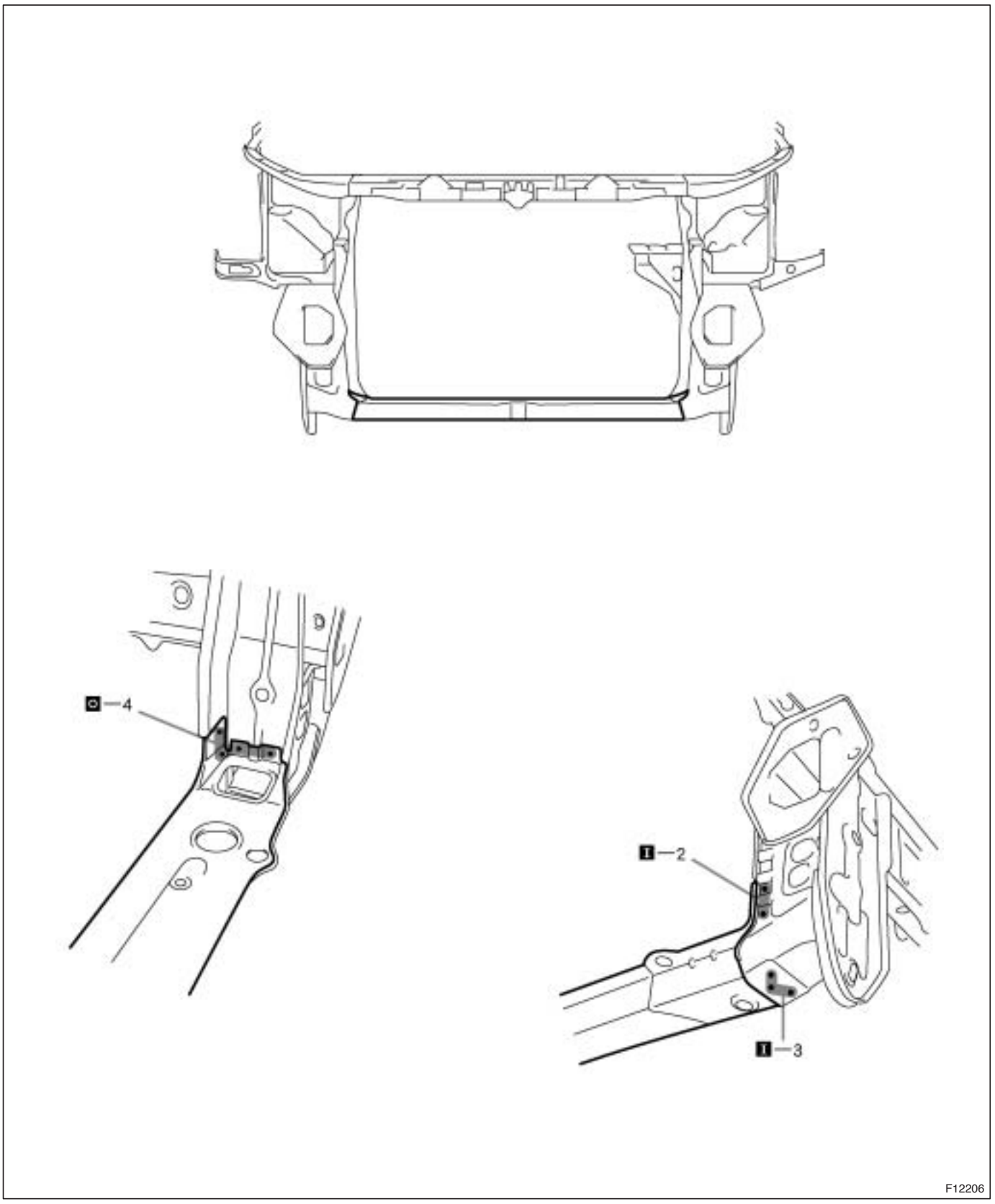

3. MEASURING THE ENGINE COMPARTMENT DIMENSIONS (**See page BP-94**)

4. MEASURING THE UNDER BODY DIMENSIONS (**See page BP-94**)

5. APPLYING ANTI-RUST AGENT

(a) After applying the top coal layer, apply the anti-rust agent to the inside of the necked section structural weld spots.

RADIATOR SUPPORT (ASSY)

REPLACEMENT

1. REMOVE RADIATOR SUPPORT

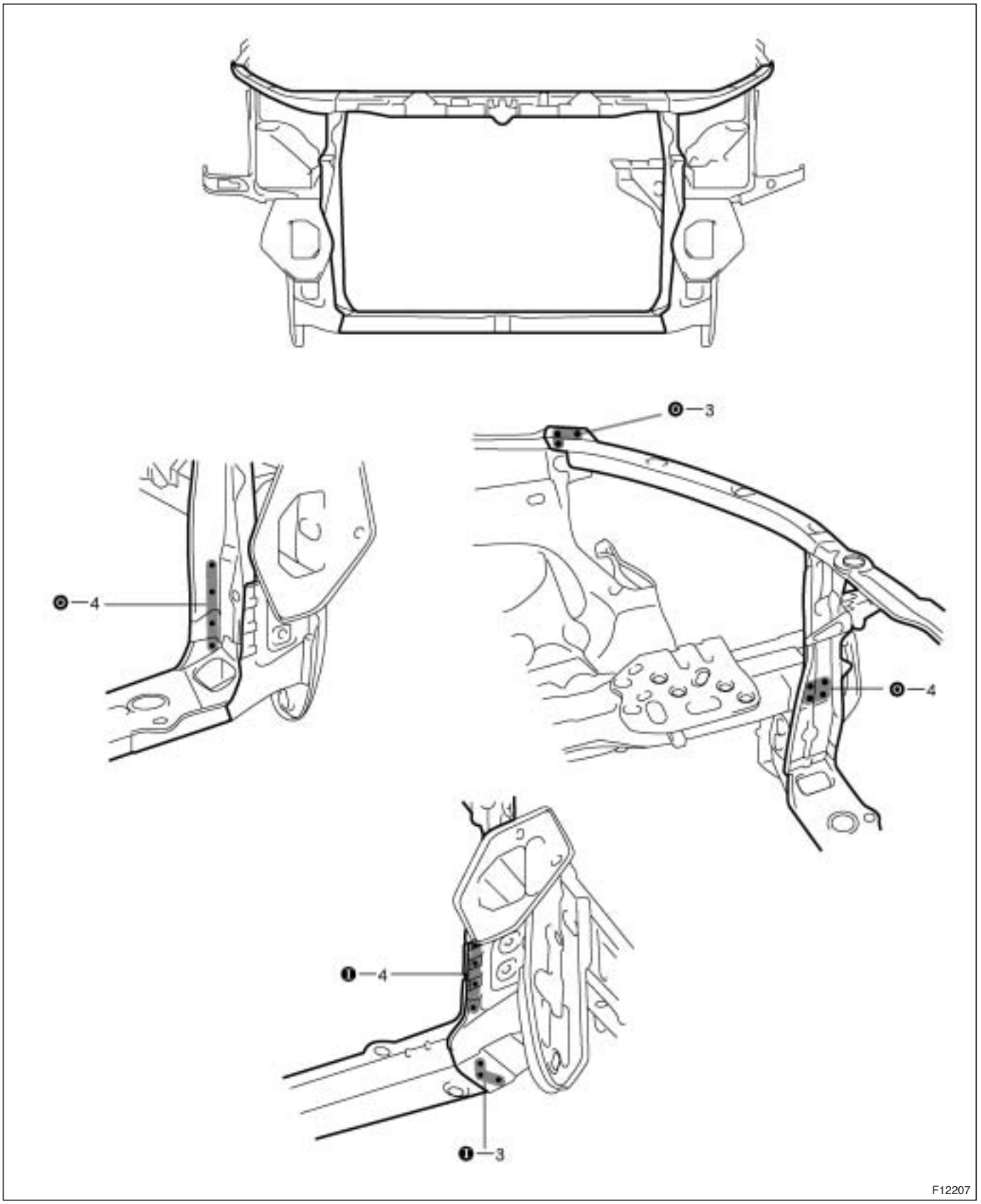

2. INSTALL RADIATOR SUPPORT

(a) Temporarily install the new parts and measure each part in accordance with the body dimension diagram.

HINT:
First install the hood lock support.

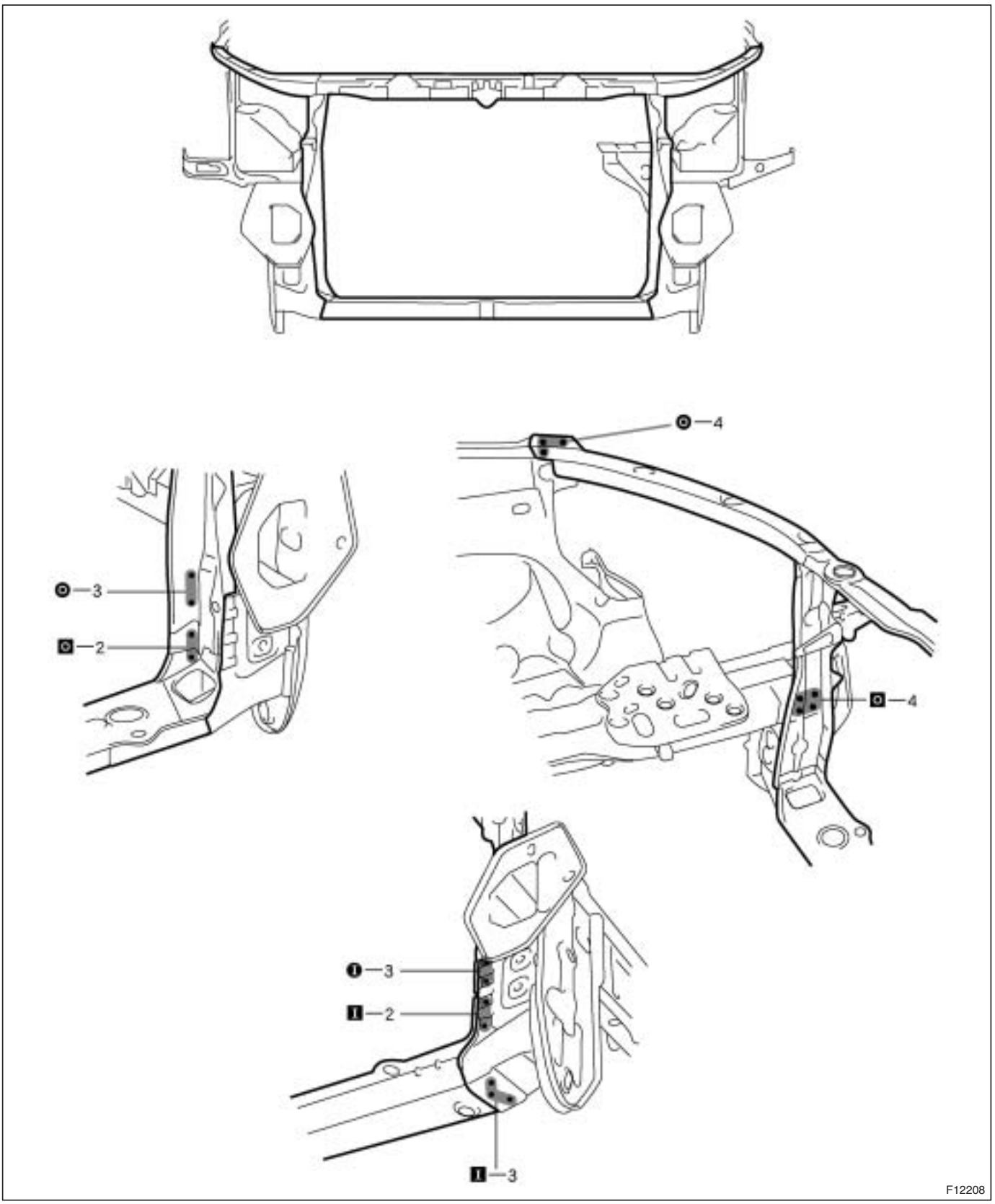

3. MEASURING THE ENGINE COMPARTMENT DIMENSIONS (See page BP-94)

4. MEASURING THE UNDER BODY DIMENSIONS (See page BP-94)

5. APPLYING ANTI-RUST AGENT

(a) After applying the top coat layer, apply the anti-rust agent to the inside of the necked section structural weld spots.

FRONT FENDER FRONT APRON (ASSY)

REPLACEMENT

1. REMOVE RADIATOR UPPER SUPPORT (See page BP-1)
2. REMOVE FRONT FENDER FRONT APRON

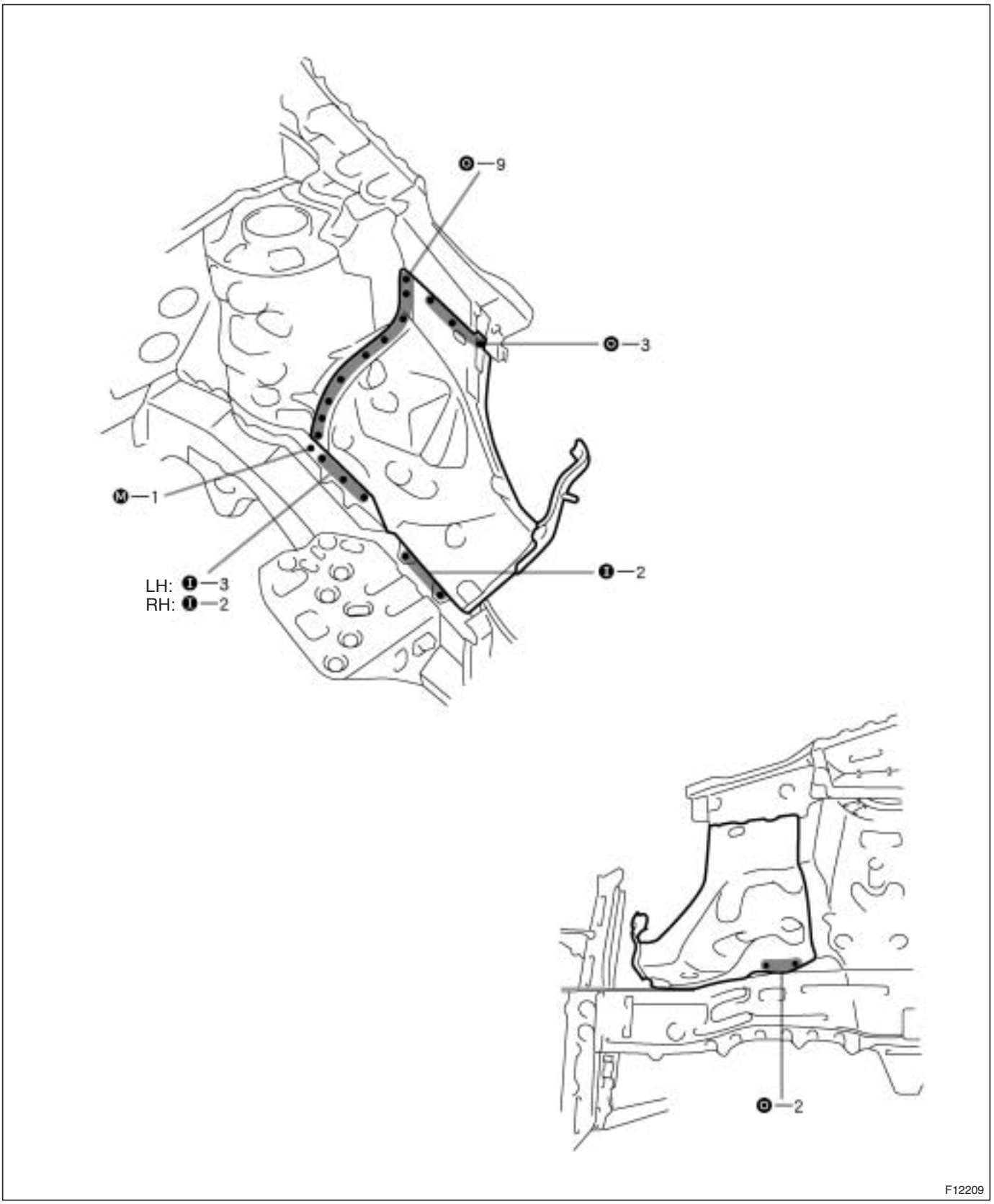

3. INSTALL FRONT FENDER FRONT APRON

(a) Temporarily install the new parts and measure each part in accordance with the body dimension diagram.

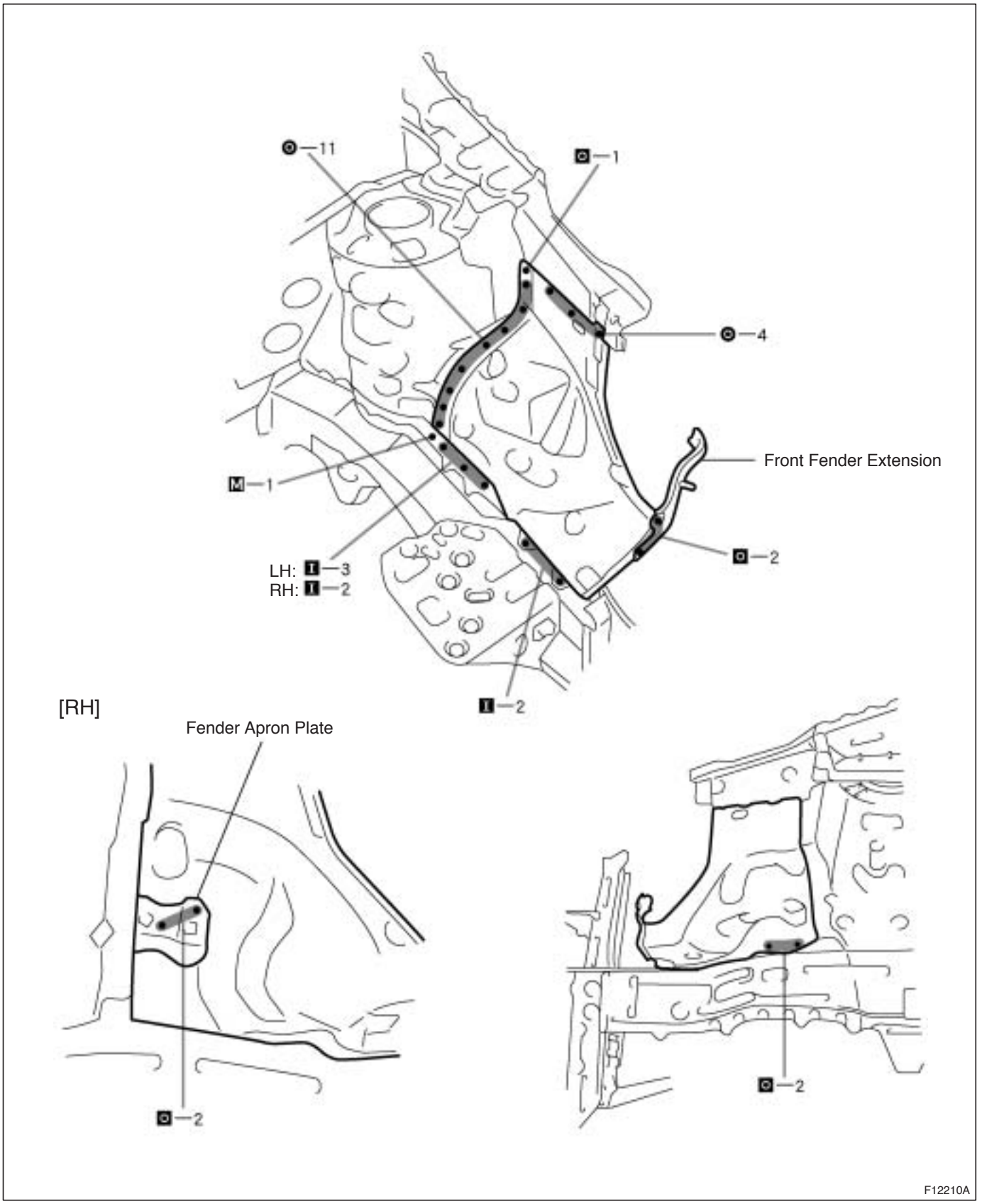

4. **MEASURING THE ENGINE COMPARTMENT DIMENSIONS** (**See page BP-94**)
5. **INSTALL RADIATOR UPPER SUPPORT** (**See page BP-1**)
6. **APPLYING SEALER TO THE ENGINE COMPARTMENT** (**See page PC-1**)
7. **APPLYING ANTI-RUST AGENT**

(a) After applying the top coal layer, apply the anti-rust agent to the inside of the necked section structural weld spots.

FRONT FENDER APRON (ASSY)

REPLACEMENT

1. REMOVE RADIATOR UPPER SUPPORT (See page BP-1)
2. REMOVE COWL TOP SIDE PANEL (See page BP-18)
3. REMOVE FRONT FENDER APRON

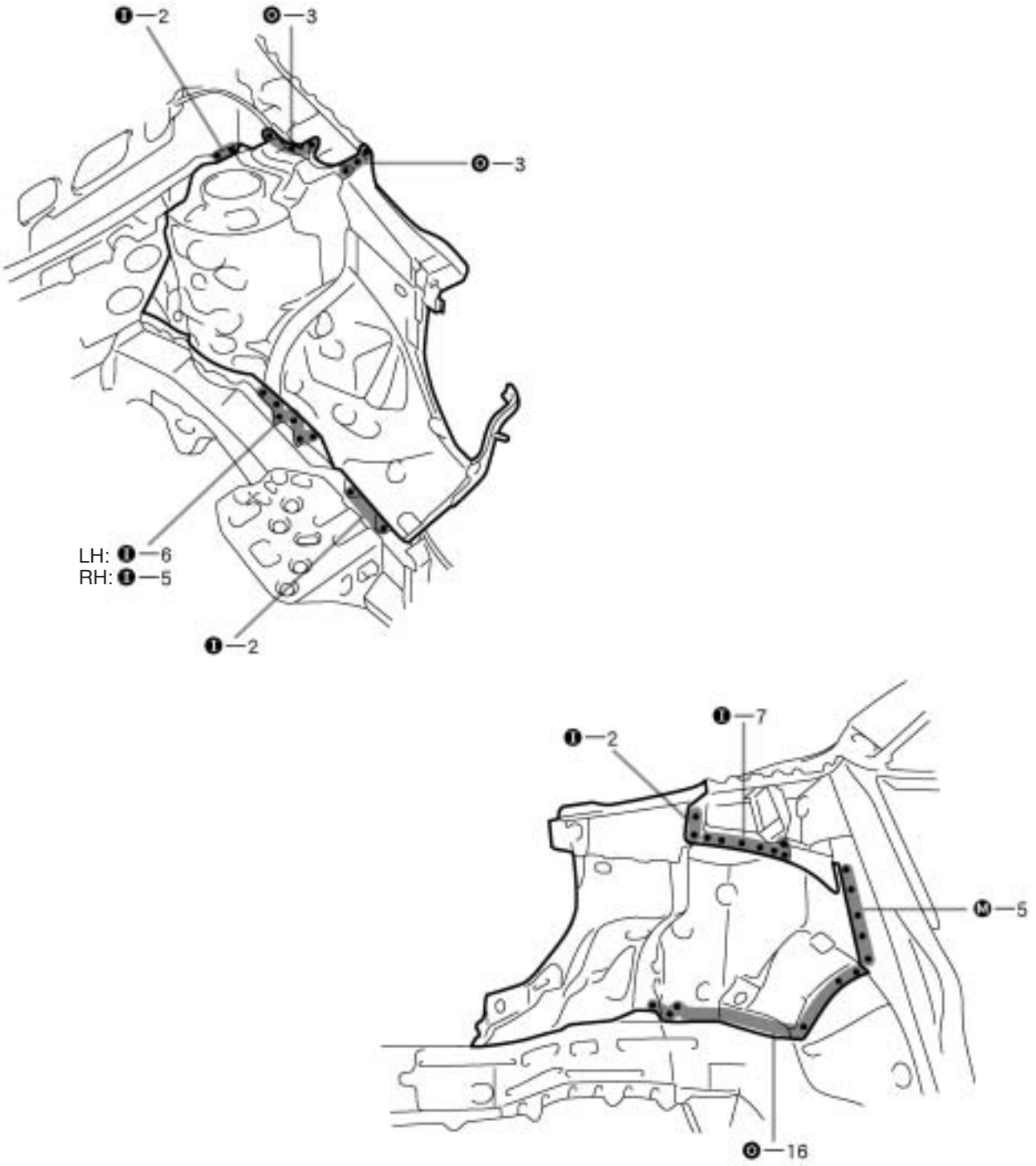

4. INSTALL FRONT FENDER APRON

HINT:
Inspect the fitting of the front fender and hood, etc. before welding, since this affects the appearance of the finish.

(a) Temporarily install the new parts and measure each part in accordance with the body dimension diagram.

HINT:
Make sure each measurement is correct, as this parts affects the front wheel alignment.

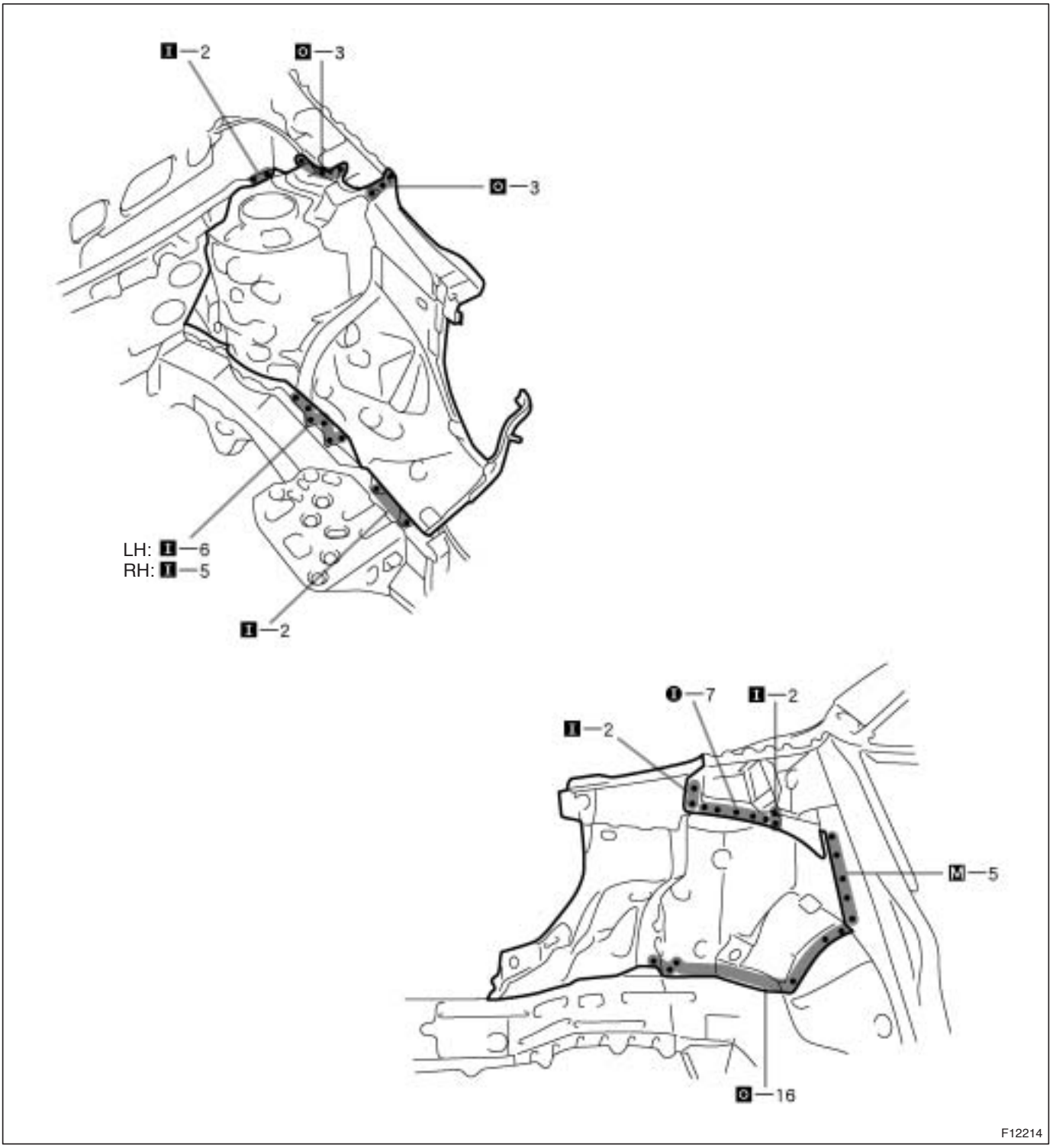

5. **MEASURING THE ENGINE COMPARTMENT DIMENSIONS (See page BP-94)**
6. **MEASURING THE UNDER BODY DIMENSIONS (See page BP-94)**
7. **INSTALL COWL TOP SIDE PANEL (See page BP-18)**
8. **INSTALL RADIATOR UPPER SUPPORT (See page BP-1)**
9. **APPLYING SEALER TO THE ENGINE COMPARTMENT (See page PC-1)**
10. **APPLYING SEALER TO THE INSIDE OF THE VEHICLE (See page PC-1)**
11. **APPLYING UNDER COATING (See page PC-7)**
12. **APPLYING ANTI-RUST AGENT**

(a) After applying the top coat layer, apply the anti-rust agent to the inside of the necked section structural weld spots.

COWL TOP SIDE PANEL (ASSY)

REPLACEMENT

1. REMOVE COWL TOP SIDE PANEL

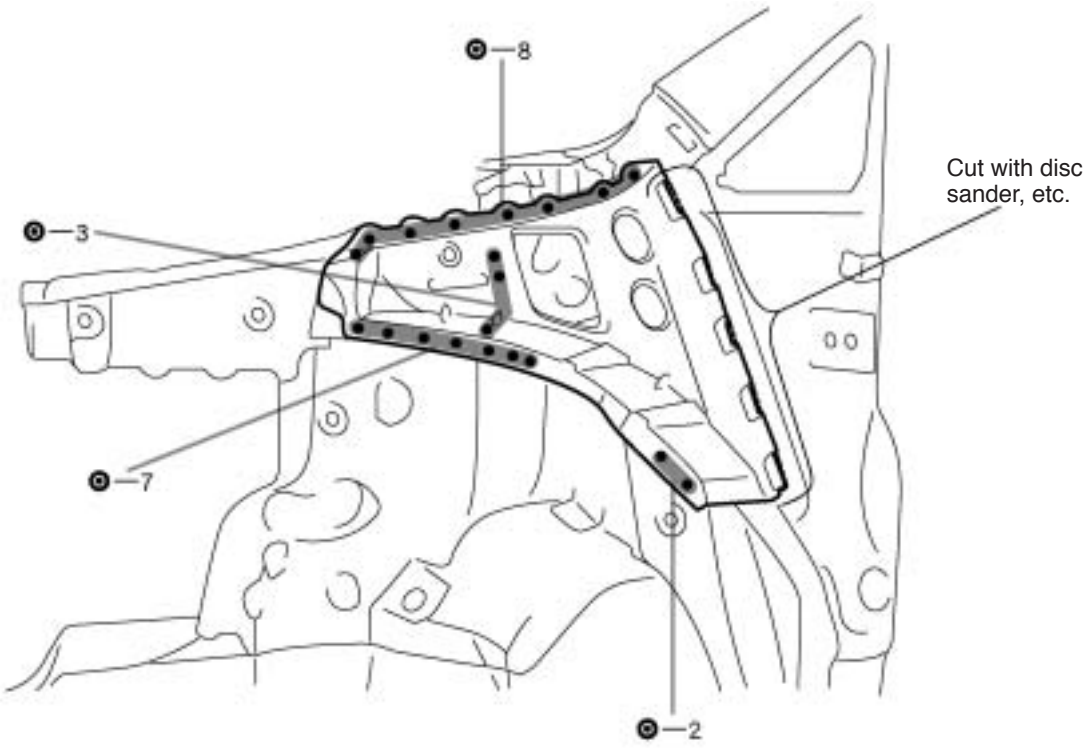

F12215A

2. INSTALL COWL TOP SIDE PANEL

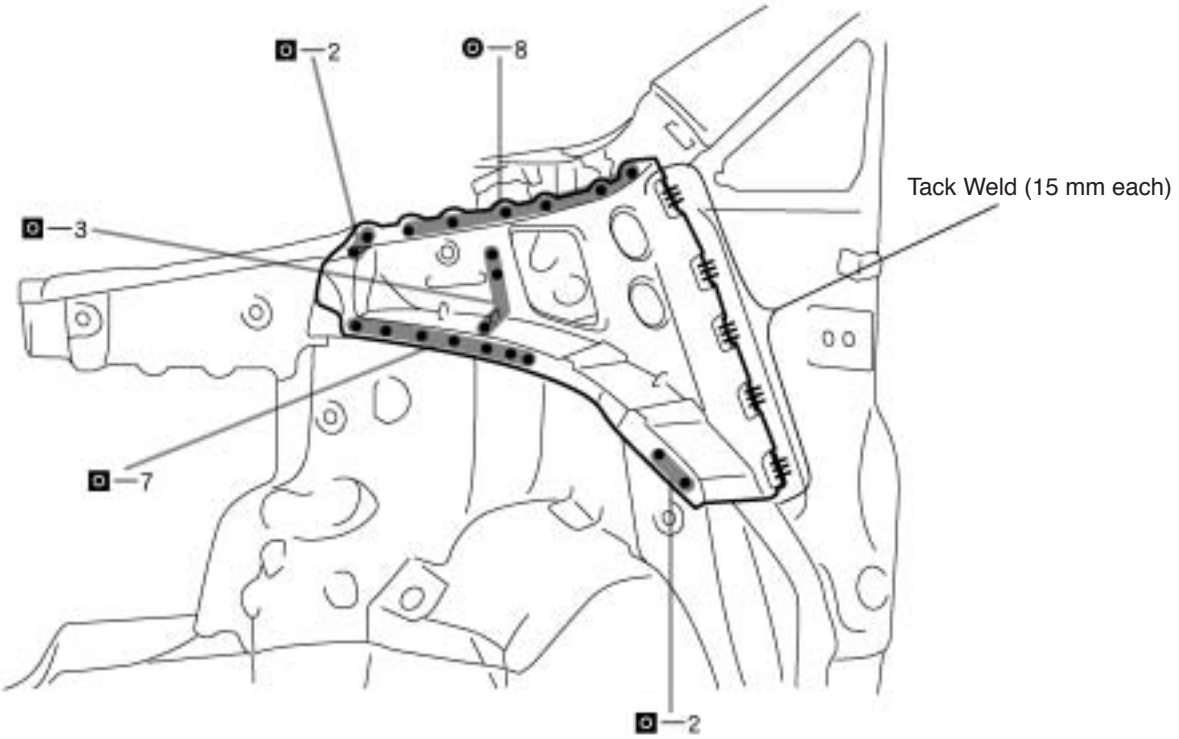

mm	in.
15	0.59

F12216A

3. APPLYING ANTI-RUST AGENT

(a) After applying the top coat layer, apply the anti-rust agent to the inside of the necked section structural weld spots.

FRONT CROSSMEMBER SIDE REINFORCEMENT (ASSY)

REPLACEMENT

1. REMOVE FRONT CROSSMEMBER SIDE REINFORCEMENT

(a) Replace the front crossmember No.2 reinforcement and front side member front plate at the same time.

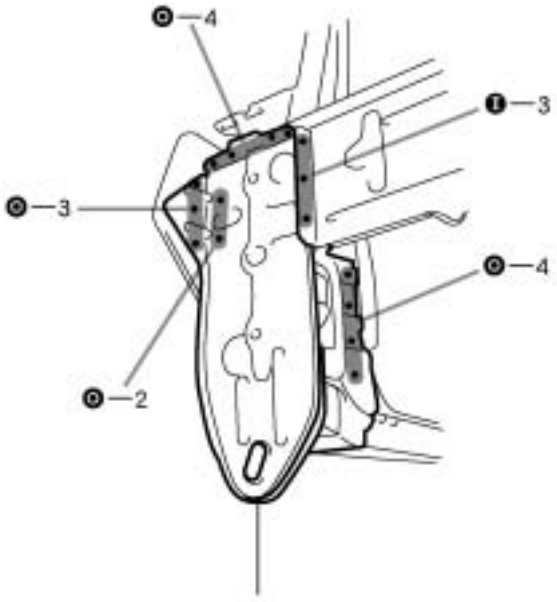

Front Side Member Front Plate

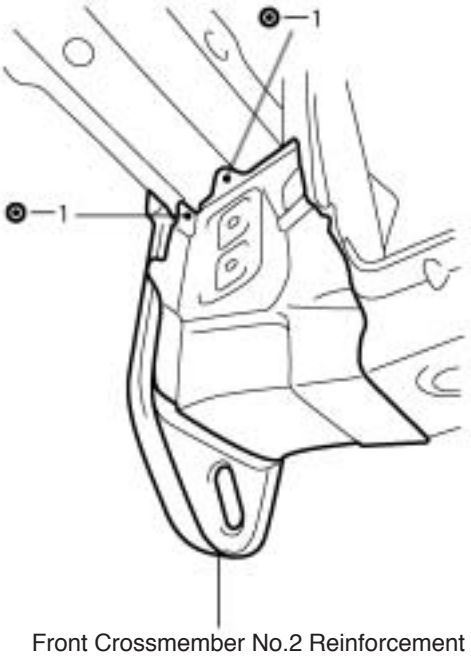

Front Crossmember No.2 Reinforcement

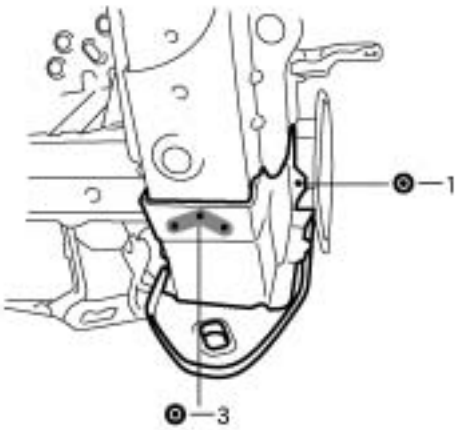

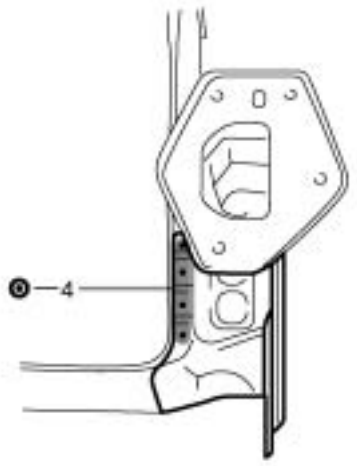

F12211A

2. INSTALL FRONT CROSSMEMBER SIDE REINFORCEMENT

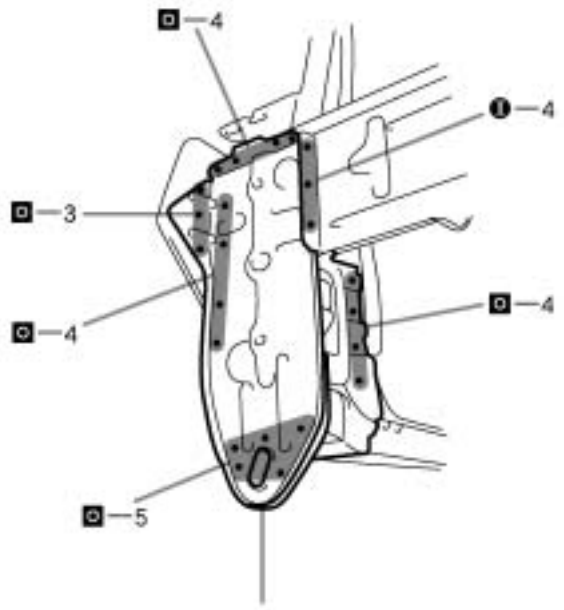

Front Side Member Front Plate

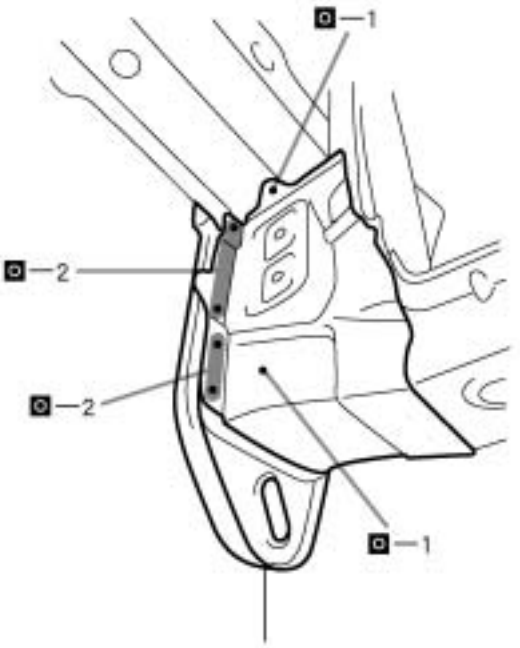

Front Crossmember No.2 Reinforcement

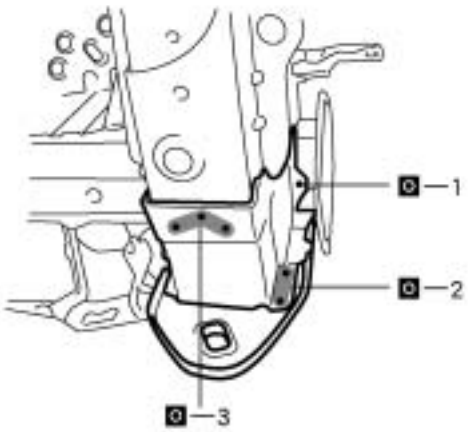

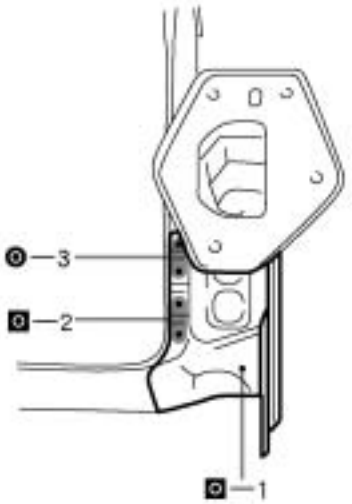

F12212A

3. APPLYING ANTI-RUST AGENT

(a) After applying the top coat layer, apply the anti-rust agent to the inside of the necked section structural weld spots.

FRONT SIDE MEMBER (CUT-P)

REPLACEMENT

1. **REMOVE RADIATOR UPPER SUPPORT (See page BP-1)**
2. **REMOVE RADIATOR SUPPORT UPPER BRACE (See page BP-3)**
3. **REMOVE FRONT CROSSMEMBER SIDE REINFORCEMENT (See page BP-20)**
4. **REMOVE FRONT SIDE MEMBER**

(a) Remove the front side member outer plate at the same time.

(b) Cut and join the parts at the locations as shown below.

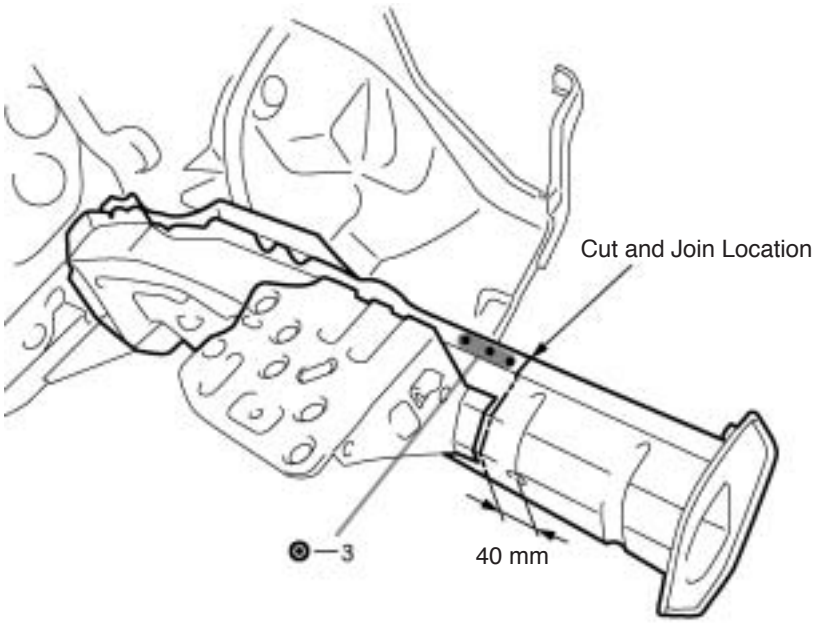

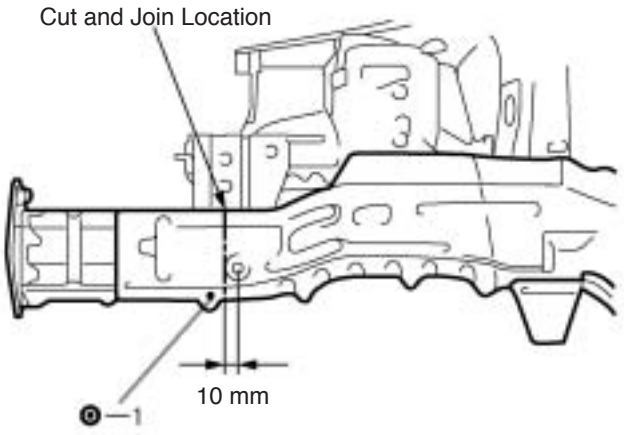

mm	in.
10	0.39
40	1.57

F12217A

5. INSTALL FRONT SIDE MEMBER

(a) Temporarily install the new parts and measure each part in accordance with the body dimension diagram.

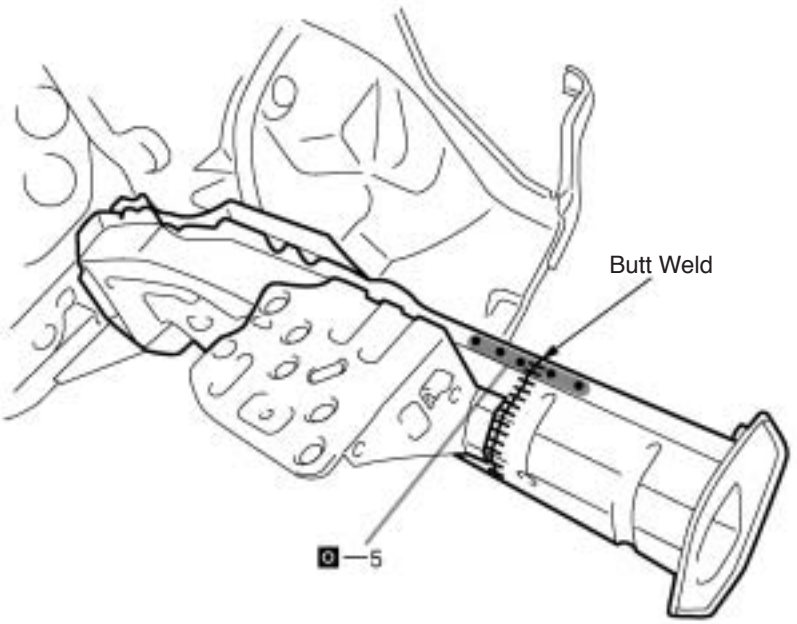

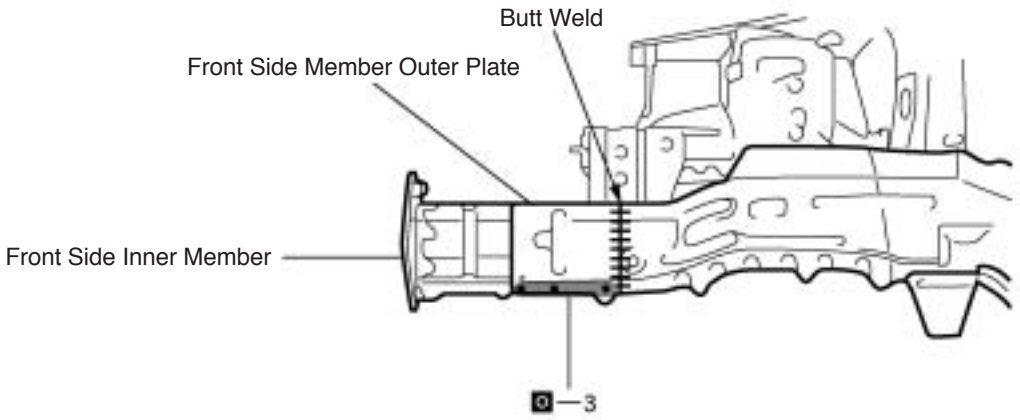

F12218A

6. **MEASURING THE ENGINE COMPARTMENT DIMENSIONS** (**See page BP-94**)
7. **MEASURING THE UNDER BODY DIMENSIONS** (**See page BP-94**)
8. **INSTALL FRONT CROSSMEMBER SIDE REINFORCEMENT** (**See page BP-20**)
9. **INSTALL RADIATOR SUPPORT UPPER BRACE** (**See page BP-3**)
10. **INSTALL RADIATOR UPPER SUPPORT** (**See page BP-1**)
11. **APPLYING SEALER TO THE ENGINE COMPARTMENT** (**See page PC-1**)
12. **APPLYING UNDER COATING** (**See page PC-1**)
13. **APPLYING ANTI-RUST AGENT**

(a) After applying the top coat layer, apply the anti-rust agent to the inside of the necked section structural weld spots.

FRONT SIDE MEMBER (ASSY)

REPLACEMENT

1. REMOVE RADIATOR UPPER SUPPORT (See page BP-1)
2. REMOVE RADIATOR SUPPORT UPPER BRACE (See page BP-3)
3. REMOVE FRONT CROSSMEMBER SIDE REINFORCEMENT (See page BP-20)
4. REMOVE COWL TOP SIDE PANEL (See page BP-18)
5. REMOVE FRONT FENDER APRON (See page BP-12)
6. REMOVE FRONT SIDE MEMBER

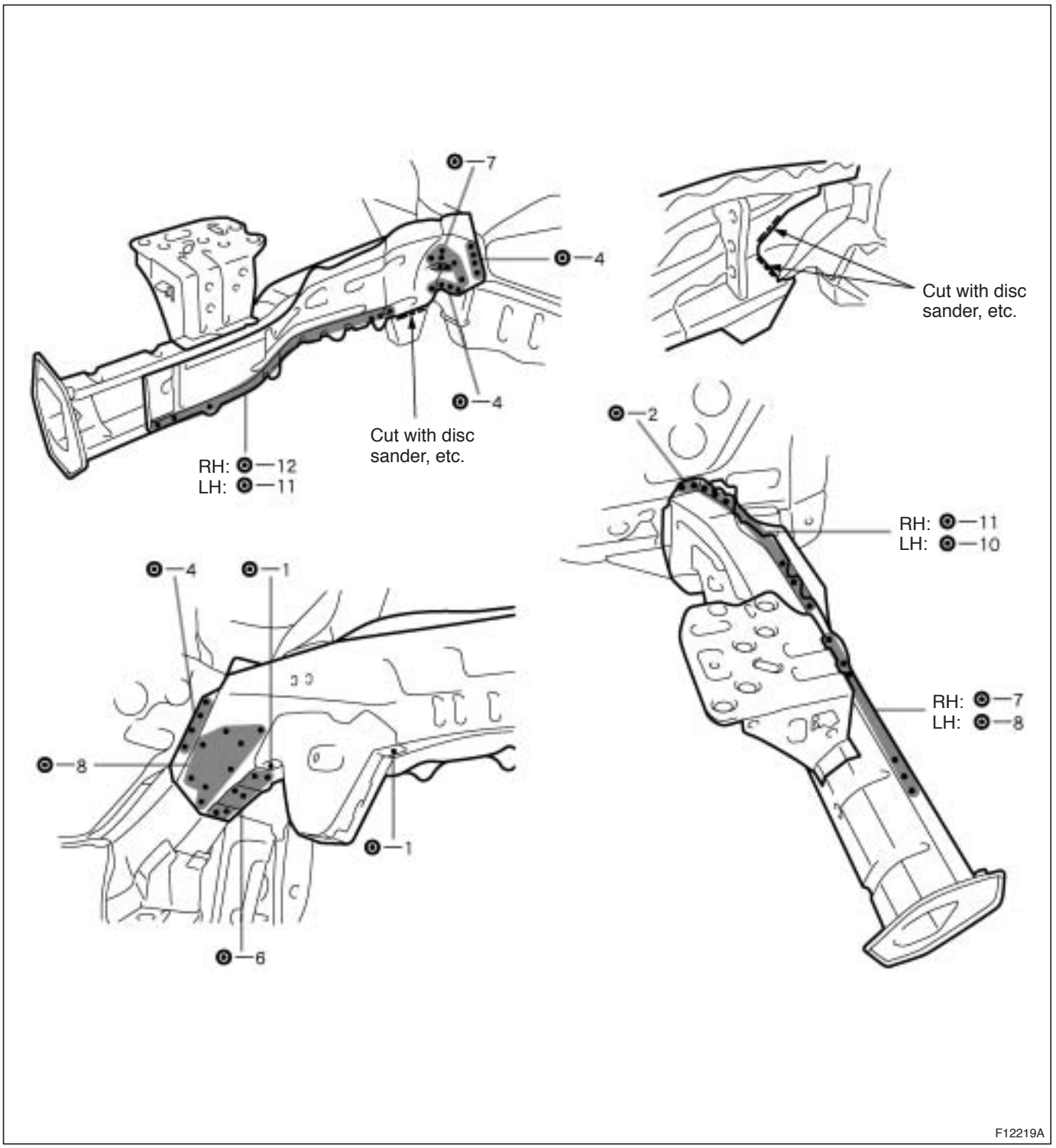

7. INSTALL FRONT SIDE MEMBER

(a) Temporarily install the new parts and measure each part in accordance with the body dimension diagram.

HINT:
Make sure each measurement is correct, as this parts affects the front wheel alignment.

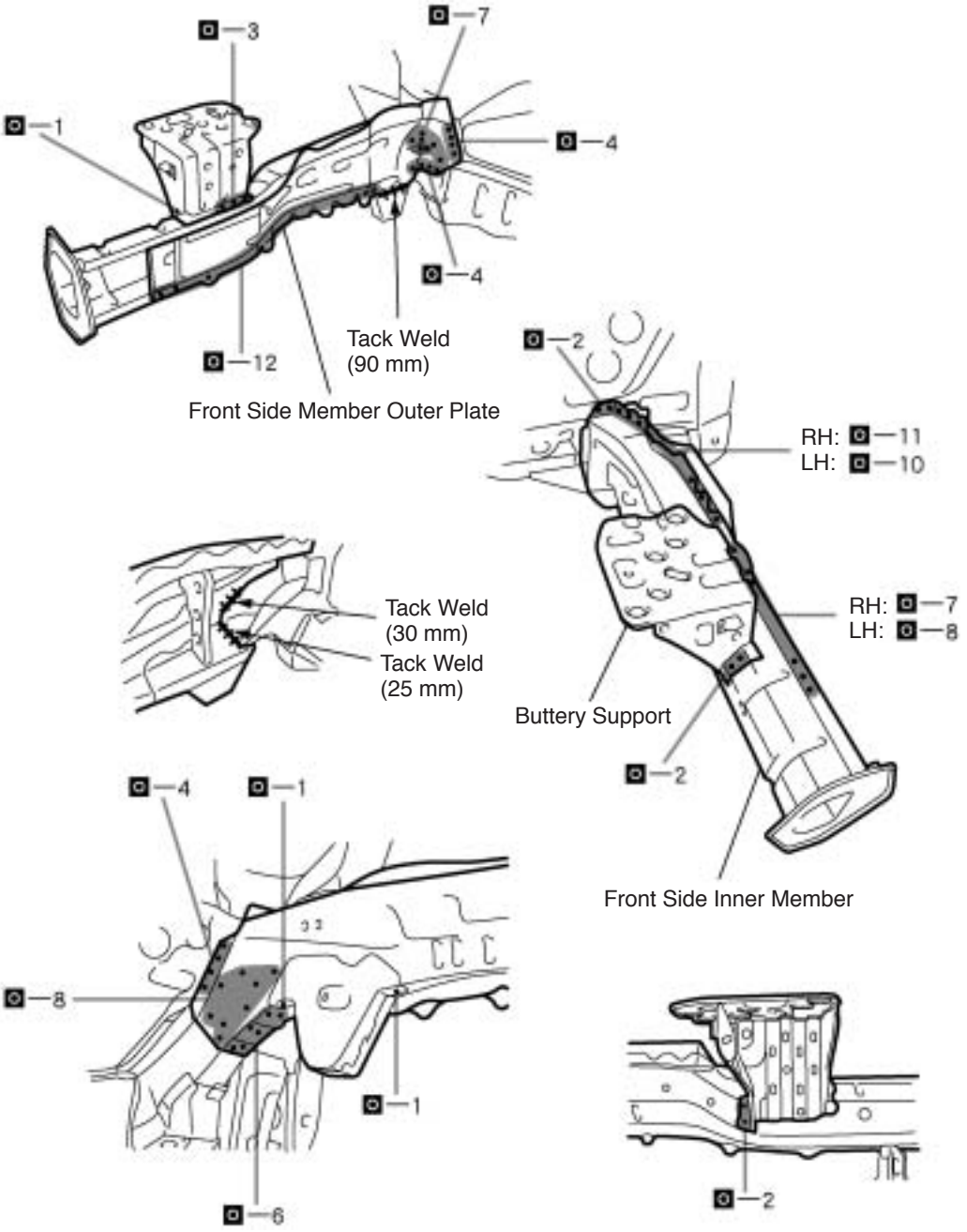

mm	in.
25	0.98
30	1.18
90	3.54

F12220A

8. **MEASURING THE ENGINE COMPARTMENT DIMENSIONS (See page BP-94)**
9. **MEASURING THE UNDER BODY DIMENSIONS (See page BP-94)**
10. **INSTALL FRONT FENDER APRON (See page BP-15)**
11. **INSTALL COWL TOP SIDE PANEL (See page BP-18)**
12. **INSTALL FRONT CROSSMEMBER SIDE REINFORCEMENT (See page BP-20)**
13. **INSTALL RADIATOR SUPPORT UPPER BRACE (See page BP-3)**
14. **INSTALL RADIATOR UPPER SUPPORT (See page BP-1)**
15. **APPLYING SEALER TO THE ENGINE COMPARTMENT (See page PC-1)**
16. **APPLYING UNDER COATING (See page PC-6)**
17. **APPLYING ANTI-RUST AGENT**

(a) After applying the top coat layer, apply the anti-rust agent to the inside of the necked section structural weld spots.

FRONT BODY PILLAR (CUT)

REPLACEMENT

1. **REMOVE COWL TOP SIDE PANEL (See page BP-18)**
2. **REMOVE FRONT BODY PILLAR**

(a) Cut and join the parts at the locations as shown below.

HINT:

- Shift the each cut and join locations of the outer pillar, cowl side panel and reinforcement.
- This part of the outer panel is reused, since the rocker panel section is cut off at the rear the outer panel supply part cutting position.

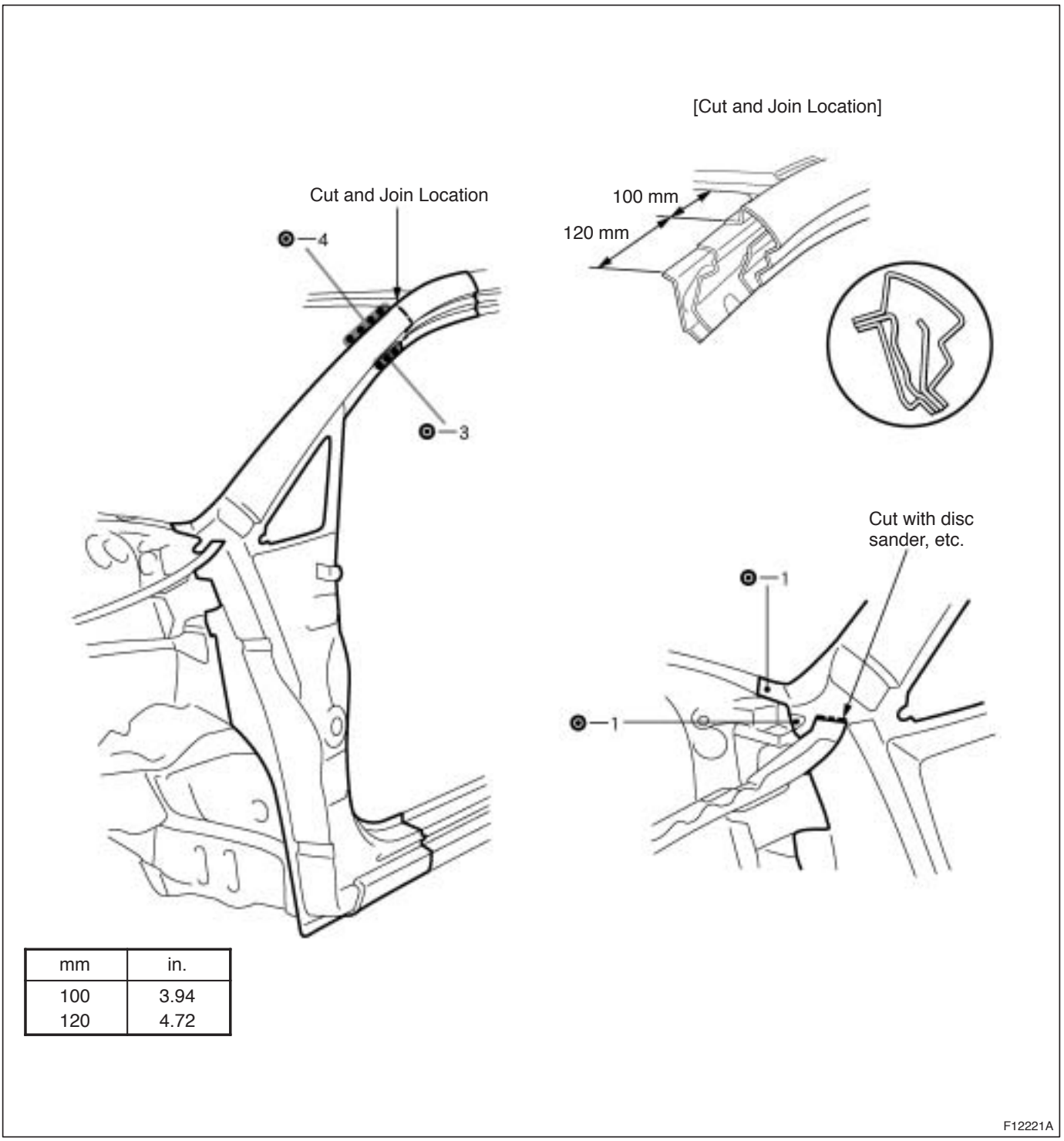

mm	in.
100	3.94
120	4.72

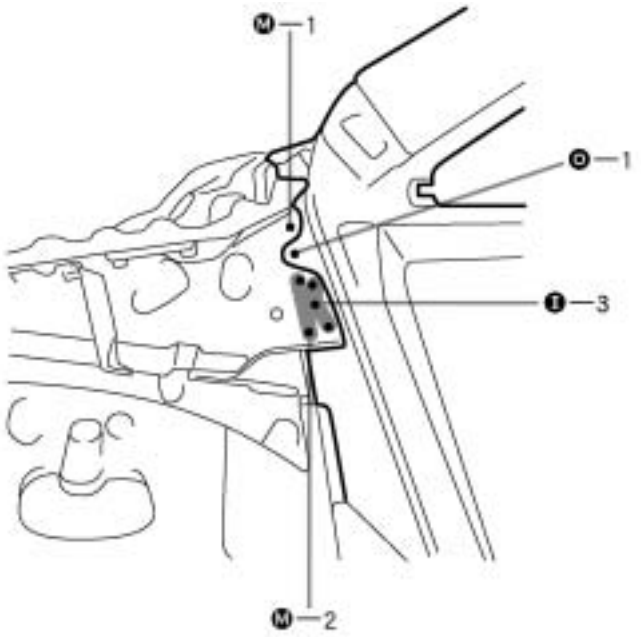

mm	in.
50	1.97
200	7.87

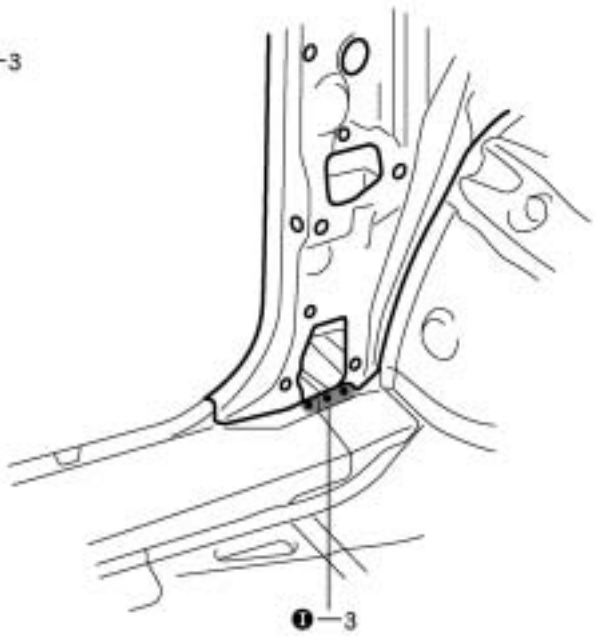

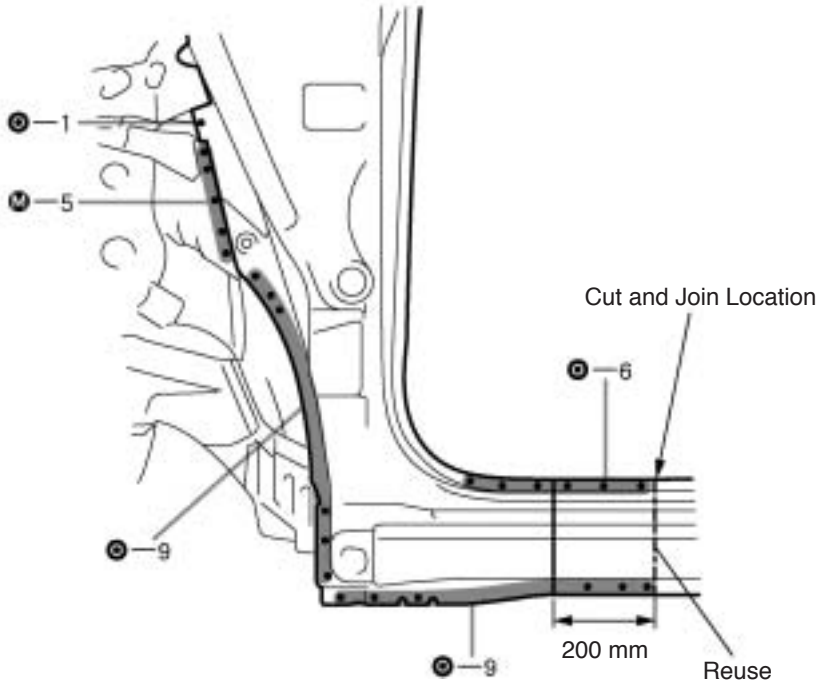

[Cut and Join Location]

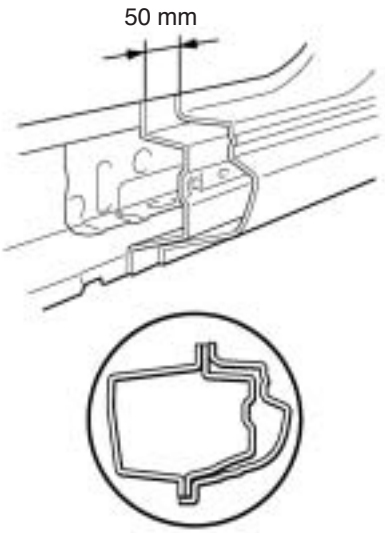

F12222A

3. INSTALL FRONT BODY PILLAR

HINT:
Before welding, check the fittings of the front fender, front door, windshield glass, etc., as this has impact on the final look of the outside of the vehicle.

(a) Disconnect the rocker outer panel of the new parts in the position indicated in the diagram below.

(b) Before initial spot welding the new parts, weld the cowl side panel, the front pillar reinforcement and the rocker outer panel at standard points.

(c) Temporarily install the new parts and measure each part in accordance with the body dimension diagram.

(d) Attach the front fender spacer at the position indicated on the diagram below.

(1) Initial spot weld the front fender, and measure the gap between the front fender and the front fender spacer attaching position.

(2) Attach a front fender spacer which is thicker than this measured gap.

HINT:
Select from thickness of 7.0 mm (0.276 in.), 7.5 mm (0.295 in.), 8.0 mm (0.315 in.), and attach.

HINT:
If a spacer thinner than the measured gap is used, the front fender will rattle when it is fitted.

(3) Fit the front fender, pushing down the attached front fender spacer, and checking that it does not rattle.

HINT:
If having wobbles, change the front fender spacer to the thicker one.
Also, check the alignment of the front fender again.

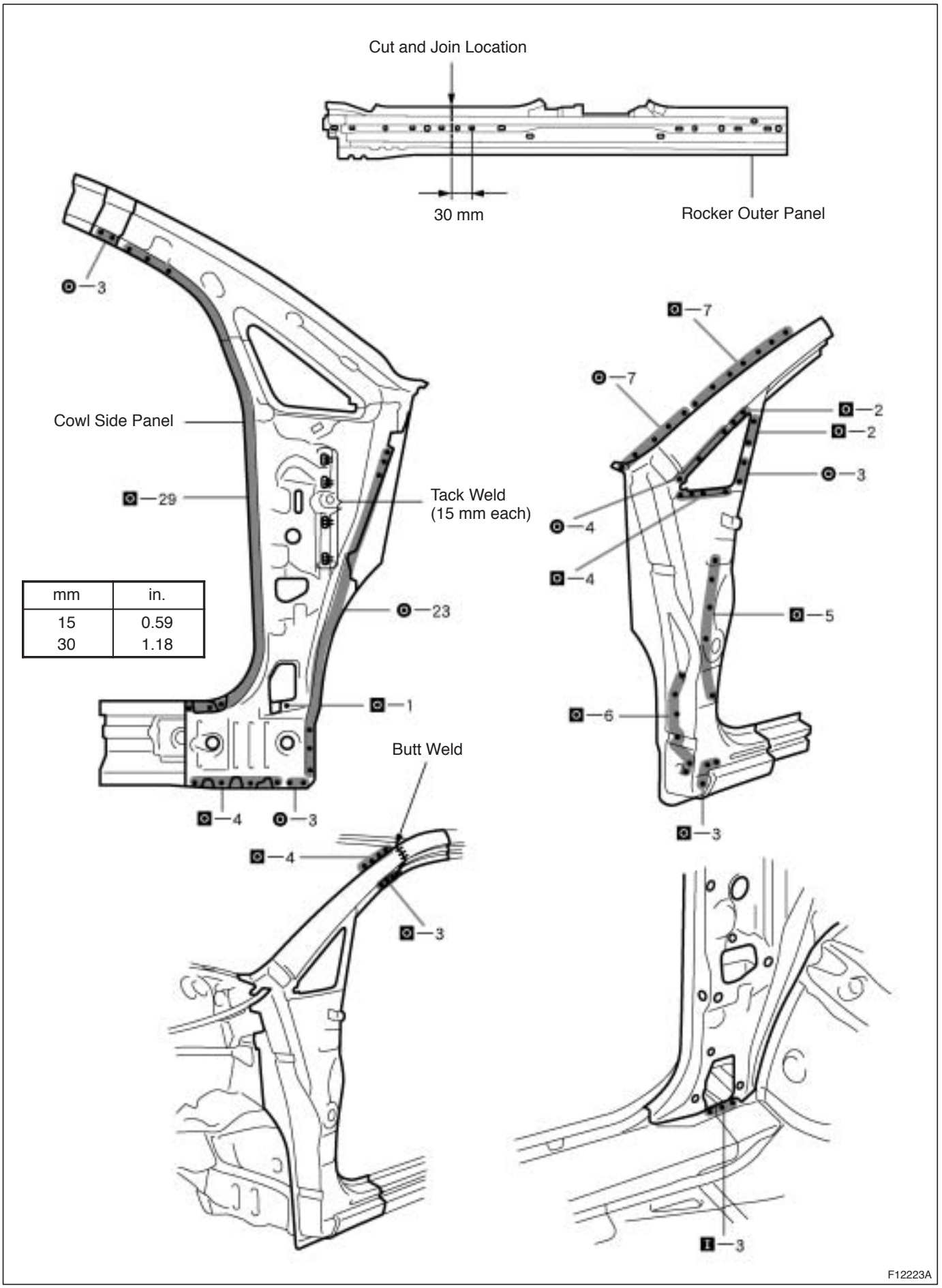
Cut and Join Location
30 mm
Rocker Outer Panel
Cowl Side Panel
Tack Weld
(15 mm each)
Butt Weld
mm
in.
15
0.59
30
1.18
F12223A

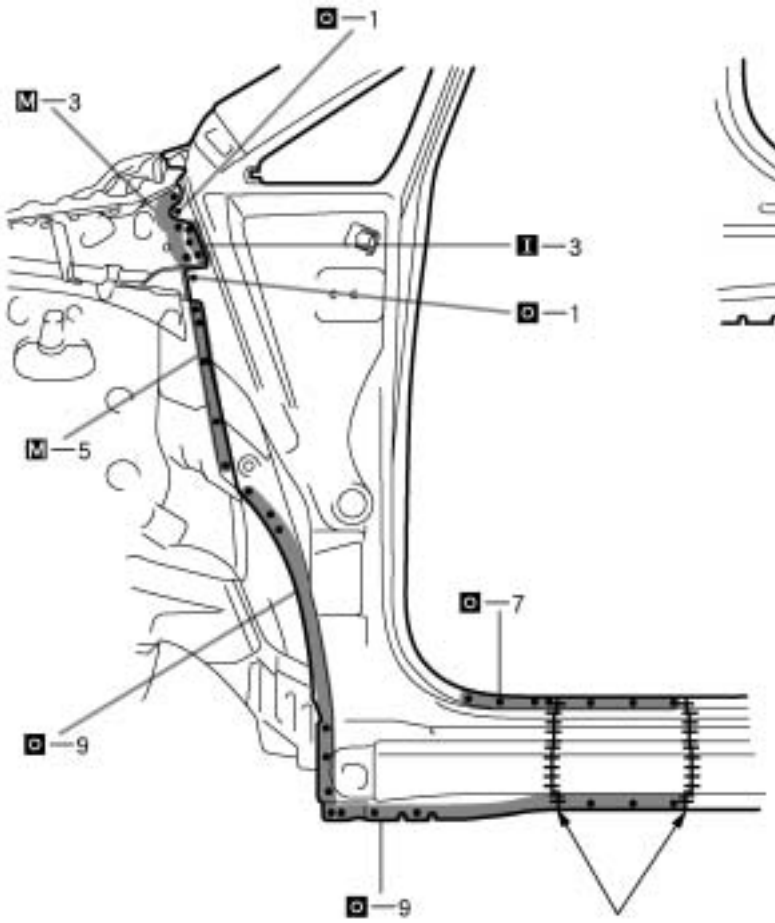

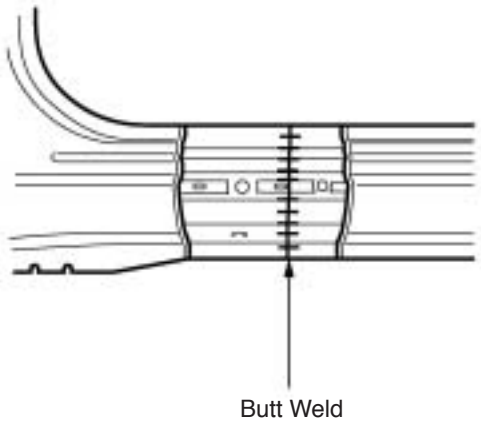

mm	in.
15	0.59

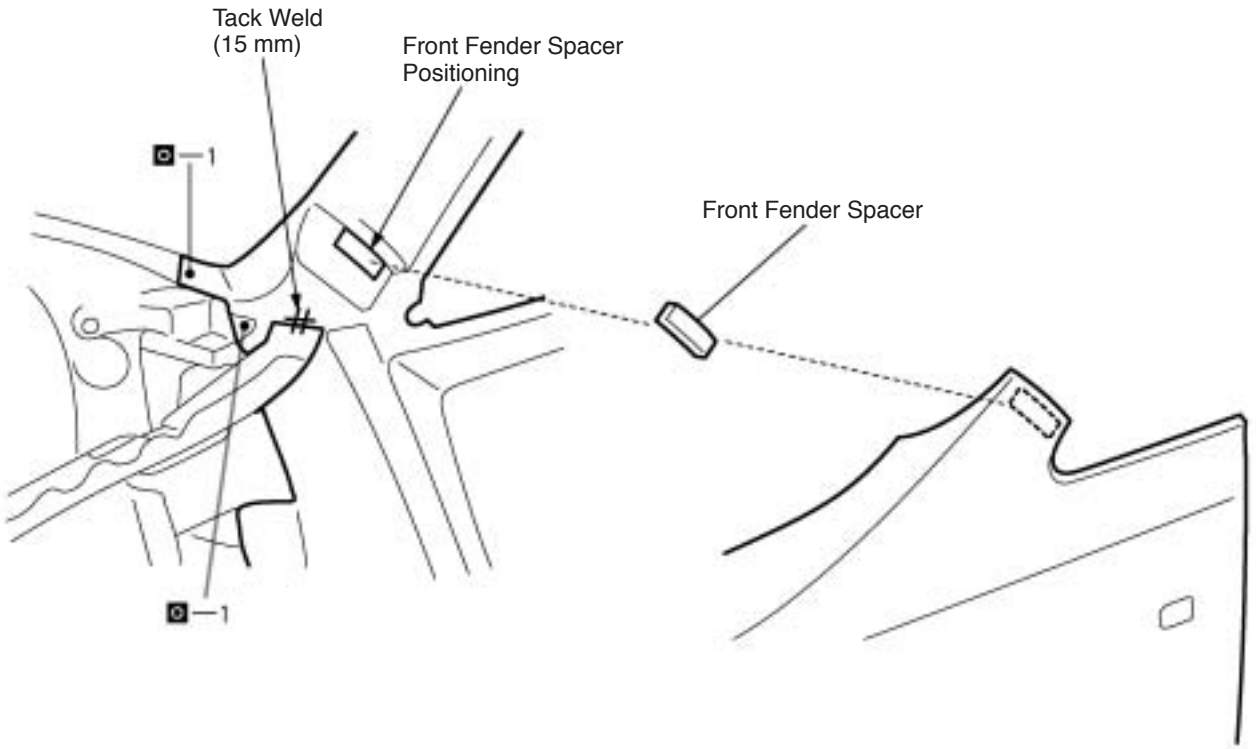

F12224A

4. **MEASURING THE ENGINE COMPARTMENT DIMENSIONS (See page BP-94)**
5. **MEASURING THE OPENING PORTION DIMENSIONS (See page BP-94)**
6. **INSTALL COWL TOP SIDE PANEL (See page BP-18)**
7. **APPLYING SEALER TO THE ENGINE COMPARTMENT (See page PC-1)**
8. **APPLYING SEALER TO THE INSIDE OF THE VEHICLE (See page PC-1)**
9. **APPLYING UNDER COATING (See page PC-6)**
10. **CHARGING THE POLYURETHANE FOAM (See page PC-8)**
11. **APPLYING ANTI-RUST AGENT**

(a) After applying the top coat layer, apply the anti-rust agent to the inside of the necked section structural weld spots.

CENTER BODY PILLAR (CUT)

REPLACEMENT

1. REMOVE CENTER BODY PILLAR

(a) Cut and join the parts at the locations as shown below.

(b) Shift the each cut and join locations of the outer panel, reinforcement, rocker outer panel center body inner pillar.

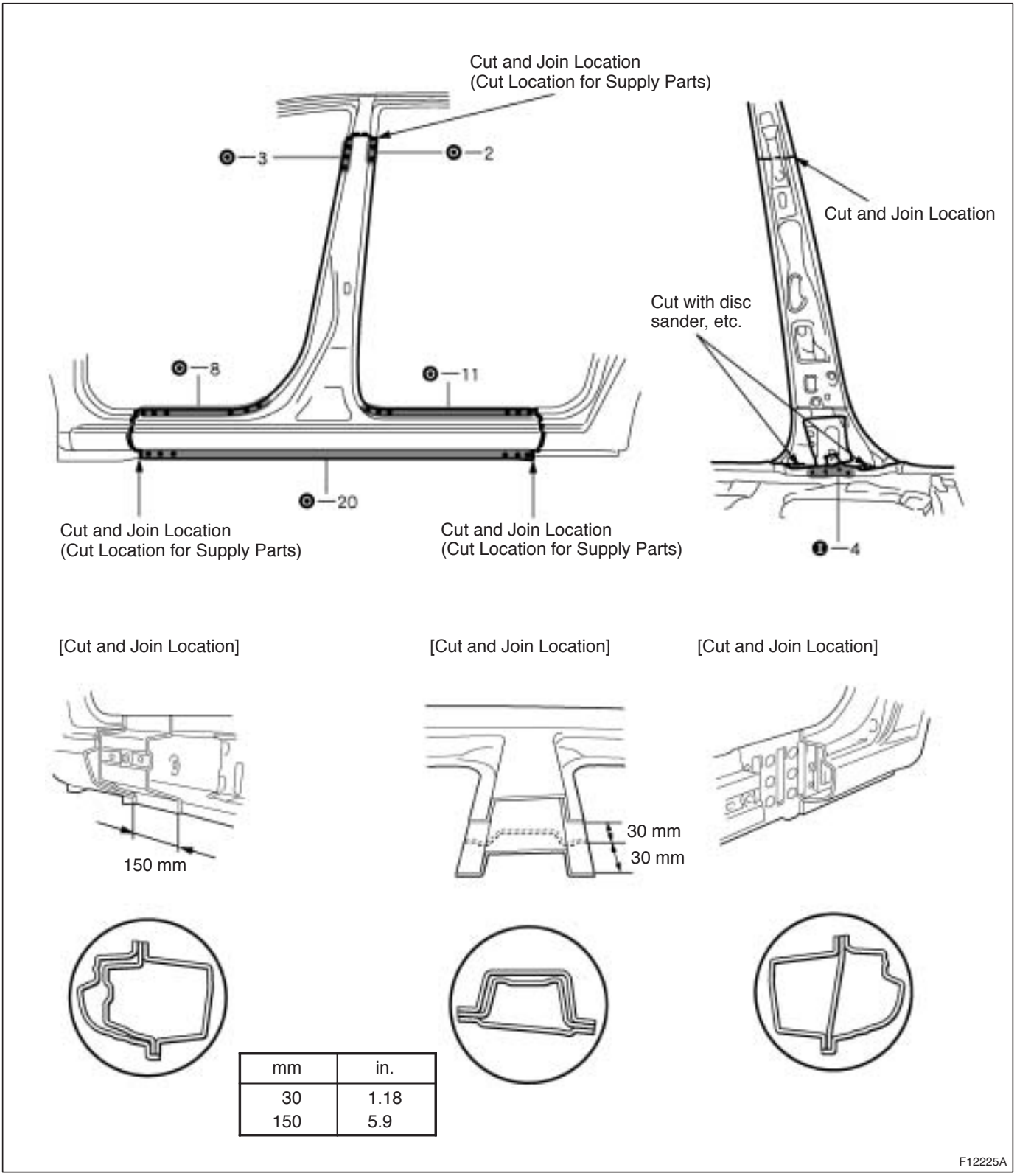

mm	in.
30	1.18
150	5.9

F12225A

HINT:
Shift the each cut and join locations of the outer panel, reinforcement and inner panel.

2. INSTALL CENTER BODY PILLAR

HINT:
Inspect the fitting of the front door and rear door, etc., before welding since this affects the appearance of the finish.

(a) Cut the new parts for the rocker outer panel at the locations as shown below.

(b) Before temporarily installing the new parts, weld the inner pillar and rocker outer panel with standard points.

(c) After welding the inner pillar, pillar reinforcement and rocker outer panel to the vehicle install the outer panel.

(d) Temporarily install the new parts and measure each part in accordance with the body dimension diagram.

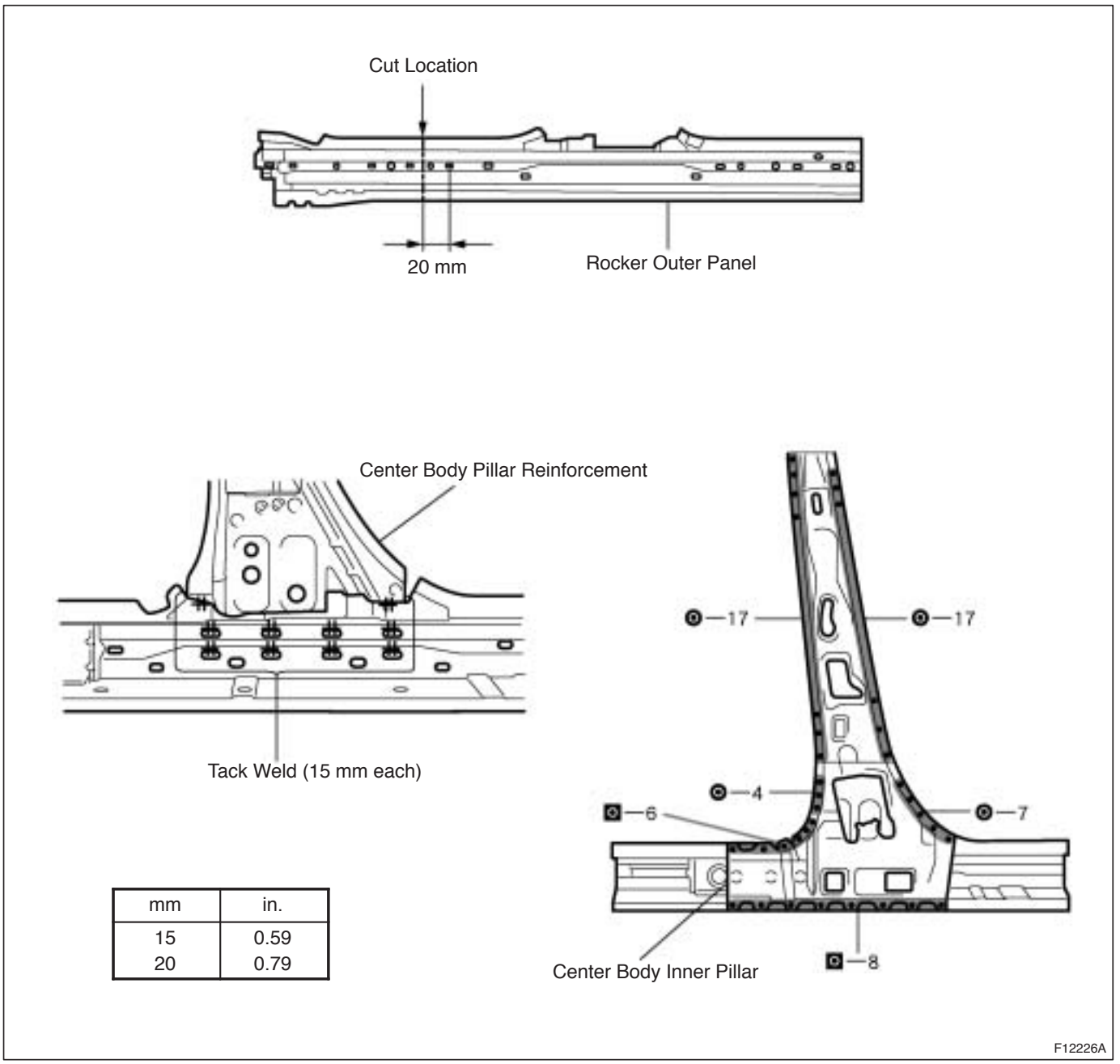

mm	in.
15	0.59
20	0.79

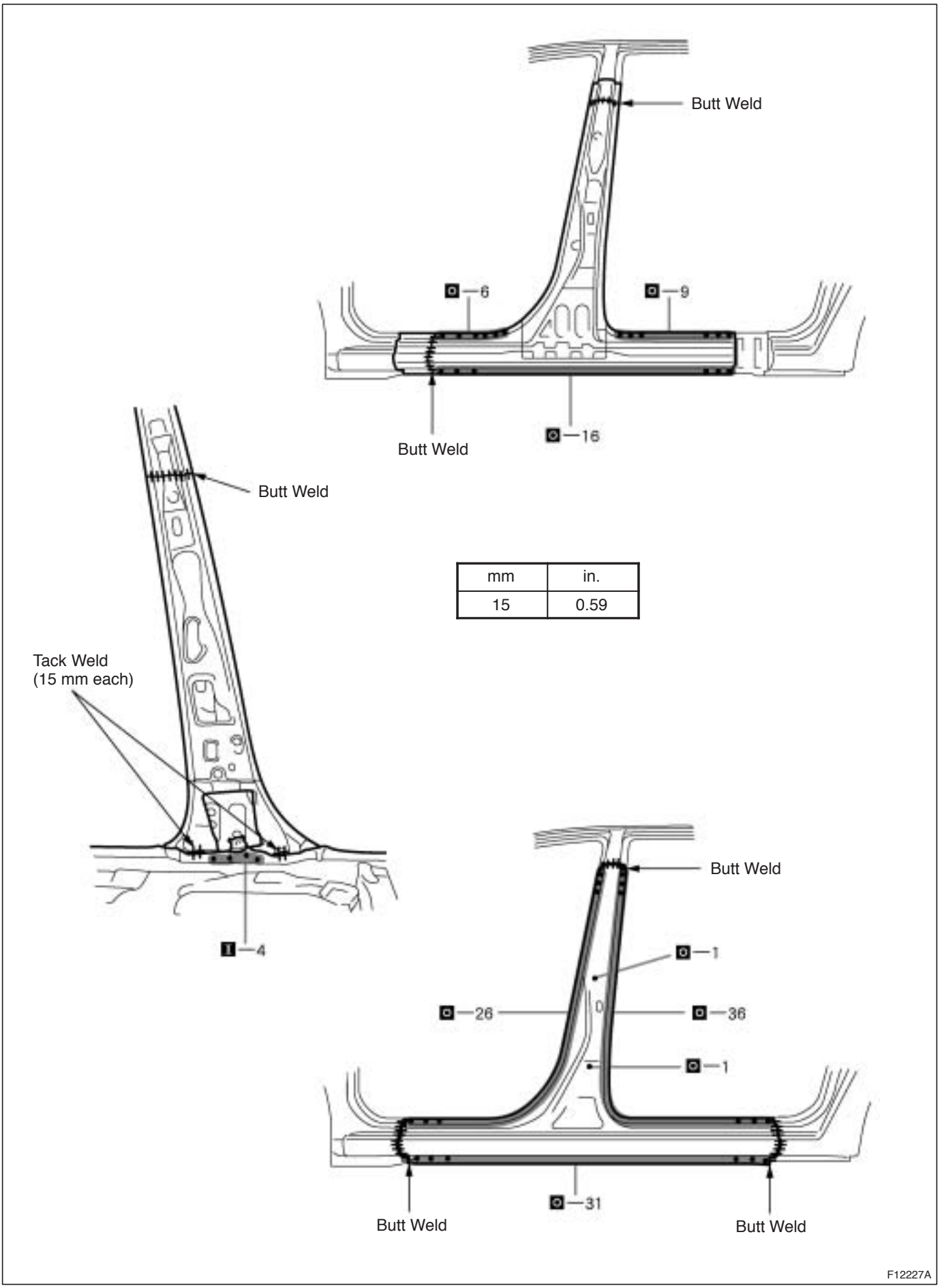
Butt Weld
6
9
16
Butt Weld
Butt Weld
Tack Weld
(15 mm each)
4
Butt Weld
1
26
36
1
31
Butt Weld
Butt Weld
F12227A

mm	in.
15	0.59

3. **MEASURING OPENING PORTION DIMENSIONS** (**See page BP-94**)
4. **APPLYING SEALER TO THE INSIDE OF THE VEHICLE** (**See page PC-1**)
5. **APPLYING UNDER COATING** (**See page PC-6**)
6. **CHARGING THE POLYURTHANE FOAM** (**See page PC-8**)
7. **APPLYING ANTI-RUST AGENT**

(a) After applying the top coat layer, apply the anti-rust agent to the inside of the necked section structural weld spots.

FRONT DOOR OUTER PANEL (ASSY)

REPLACEMENT

1. REMOVE FRONT DOOR OUTER PANEL

(a) Before removing the outer panel, make the installation position with a tape.

(b) After grinding off the hemming location, remove the outer panel.

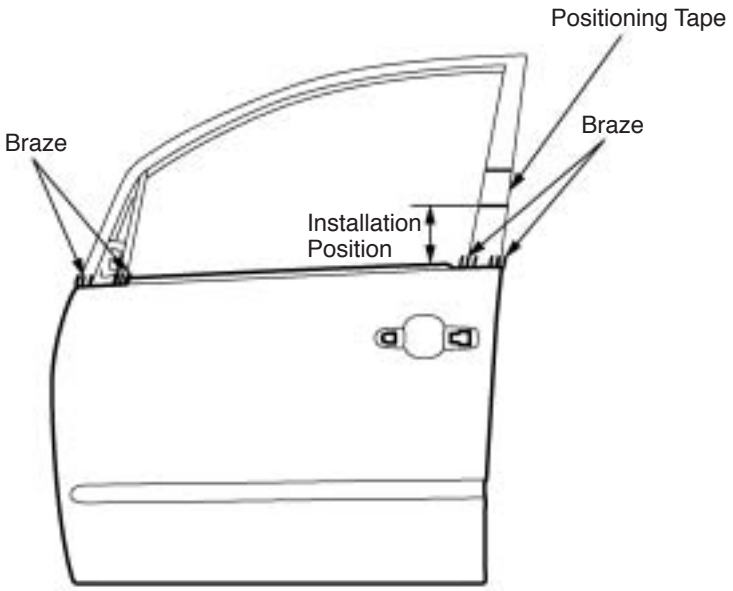

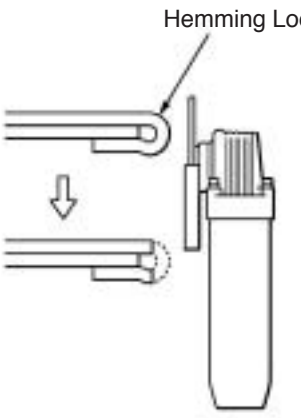

F12229A

2. INSTALL FRONT DOOR OUTER PANEL

(a) Before temporarily installing the new parts, apply body sealer to the reinforcement, side impact protection beam and back side of the new parts.

HINT:

- Apply just enough sealer for the reinforcement and side impact beam to touch the new panel. Apply sealer evenly around the flange area, about 10 mm (0.39 in.) from the edge, as shown.
- For other sealing points, refer to section PC.

(b) Bend the flange hem about 30° with a hammer and dolly, then fasten tightly with a hemming tool.

HINT:

- Perform hemming in three steps, being careful not to warp the panel.
- If a hemming tool cannot be used, hem with a hammer and dolly.

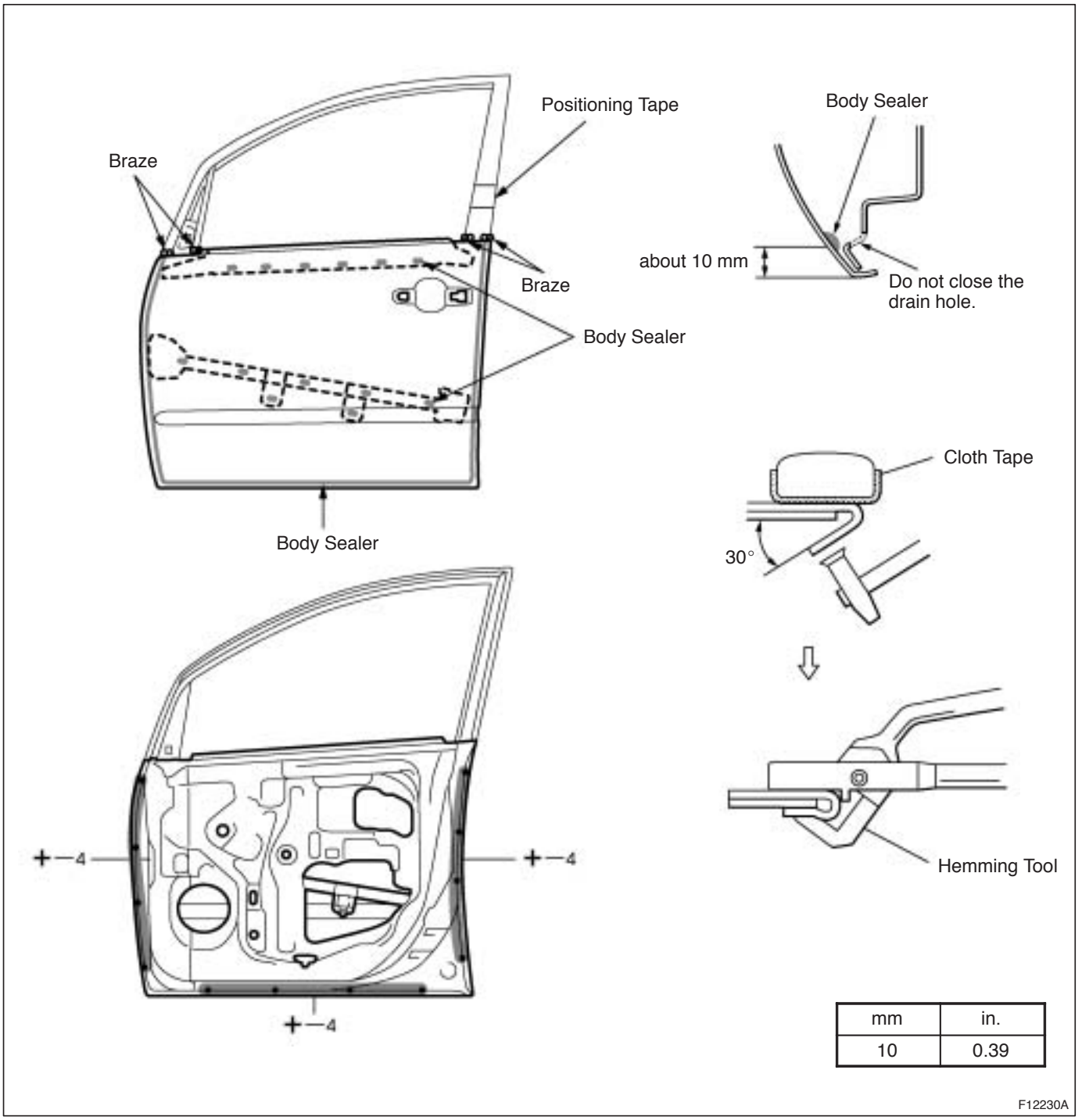

mm	in.
10	0.39

F12230A

3. APPLYING SEALER TO THE DOOR PARTS (See page PC-1)

4. APPLYING ANTI-RUST AGENT

(a) After applying the top coat layer, apply the anti-rust agent to the inside of the necked section structural weld spots.

REAR DOOR OUTER PANEL (ASSY)

REPLACEMENT

1. REMOVE REAR DOOR OUTER PANEL

(a) Before removing the outer panel, make the installation position with a tape.

(b) After grinding off the hemming location, remove the outer panel.

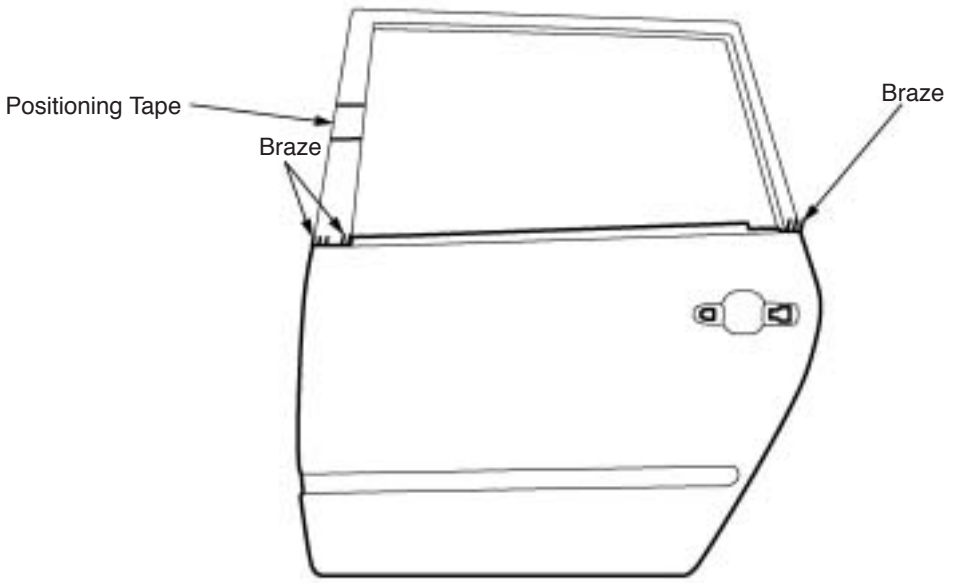

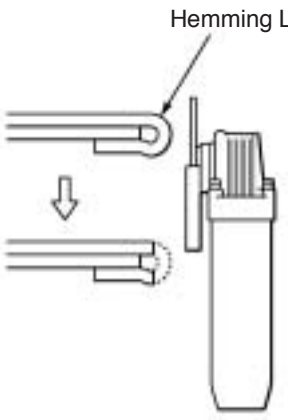

DisK Sander

F12231A

2. INSTALL FRONT DOOR OUTER PANEL

(a) Before temporarily installing the new parts, apply body sealer to the reinforcement side impact protection beam and back side of the new parts.

HINT:

- Apply just enough sealer for the reinforcement and side impact beam to touch the new panel. Apply sealer evenly around the flange area, about 10 mm (0.39 in.) from the edge, as shown.
- For other sealing points, refer to section PC.

(b) Bend the flange hem about 30° with a hammer and dolly, then fasten tightly with a hemming tool.

HINT:

- Perform hemming in three steps, being careful not to warp the panel.
- If a hemming tool cannot be used, hem with a hammer and dolly.

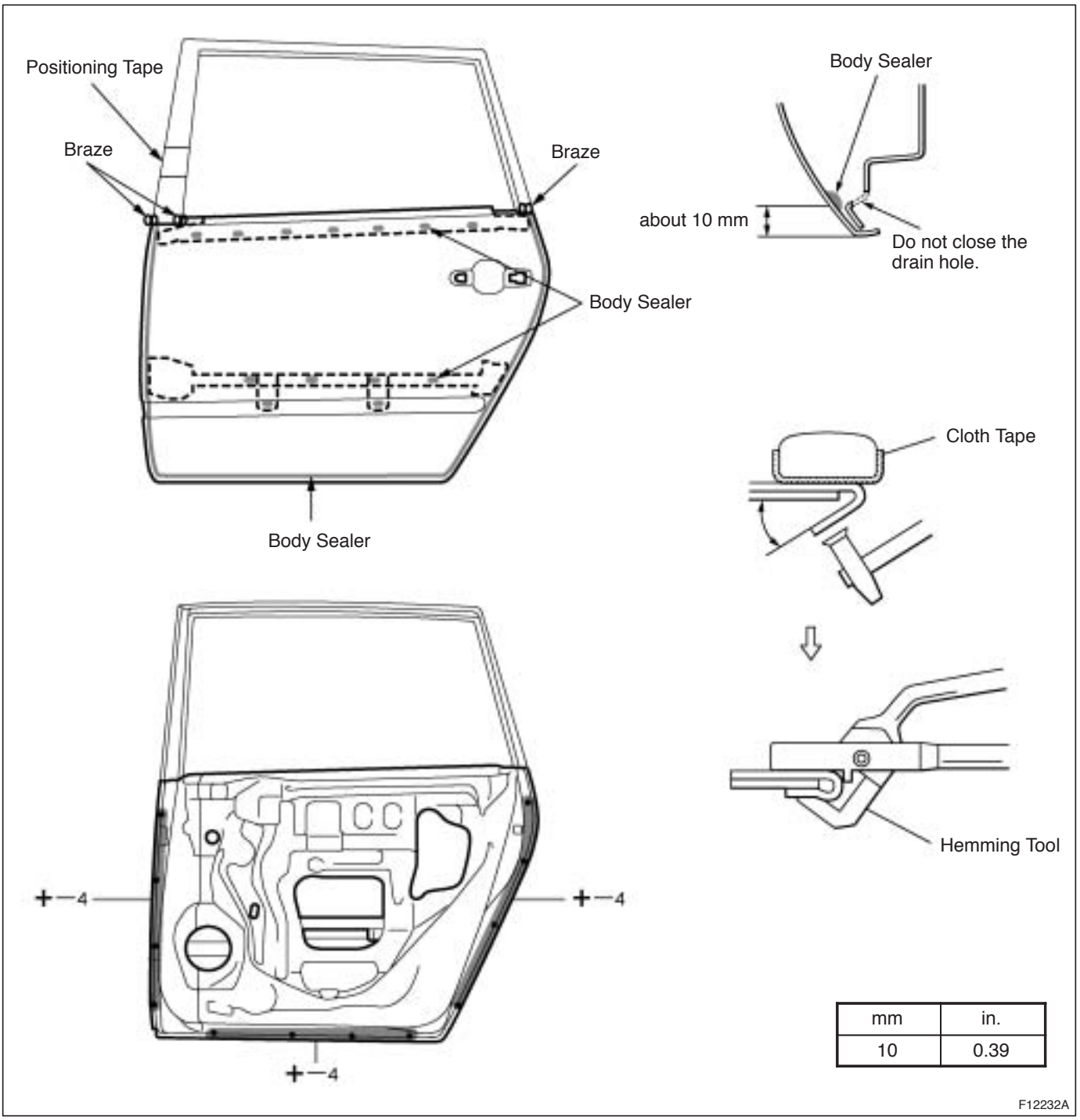

mm	in.
10	0.39

F12232A

ROCKER OUTER PANEL (CUT-P)

REPLACEMENT

1. REMOVE ROCKER OUTER PANEL

(a) Cut and join the parts at the locations as shown below.

HINT:
Take care not to damage the internal reinforcement.

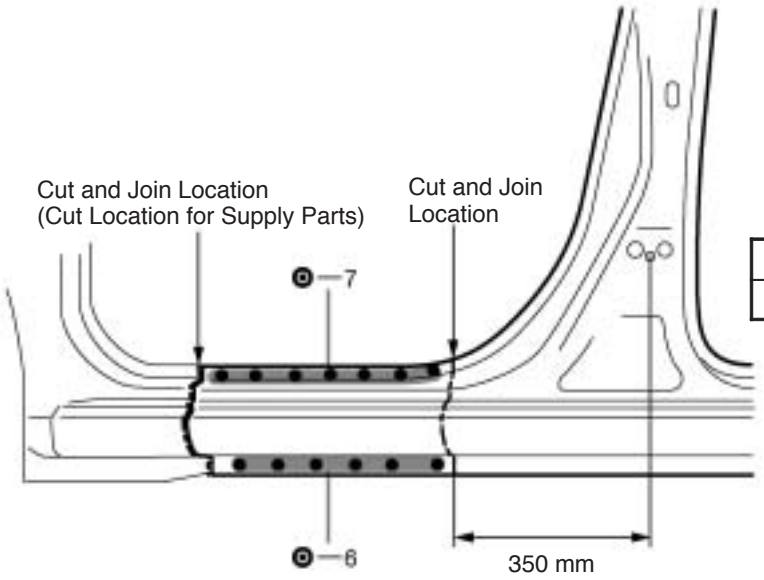

mm	in.
350	13.8

[Cut and Join Location]

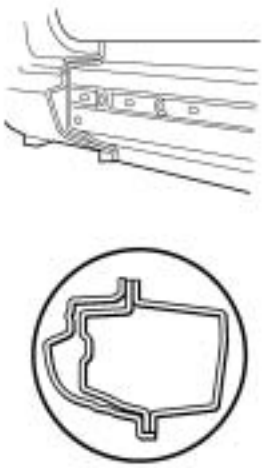

[Cut and Join Location]

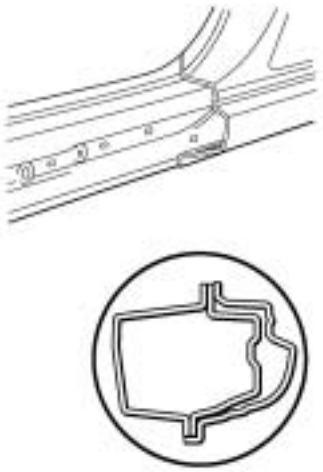

F12234A

2. INSTALL ROCKER OUTER PANEL

HINT:
Inspect the fitting of the front door, etc., before welding, since this affects the appearance of the finish.

(a) Temporarily install the new parts and measure each part in accordance with the body dimension diagram.

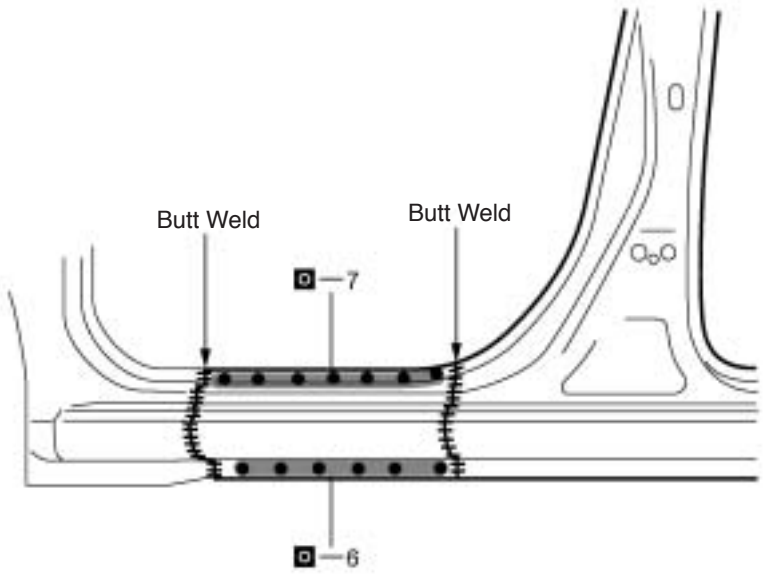

F12235A

3. MEASURING OPENING PORTION DIMENSIONS (See page BP-94)

4. APPLYING UNDER COATING (See page PC-6)

5. APPLYING ANTI-RUST AGENT

(a) After applying the top coat layer, apply the anti-rust agent to the inside of the necked section structural weld spots.

ROCKER OUTER PANEL (CUT)

REPLACEMENT

1. REMOVE ROCKER OUTER PANEL

(a) Cut and join the parts at the locations as shown below.

HINT:
Take care not to damage the internal reinforcement.

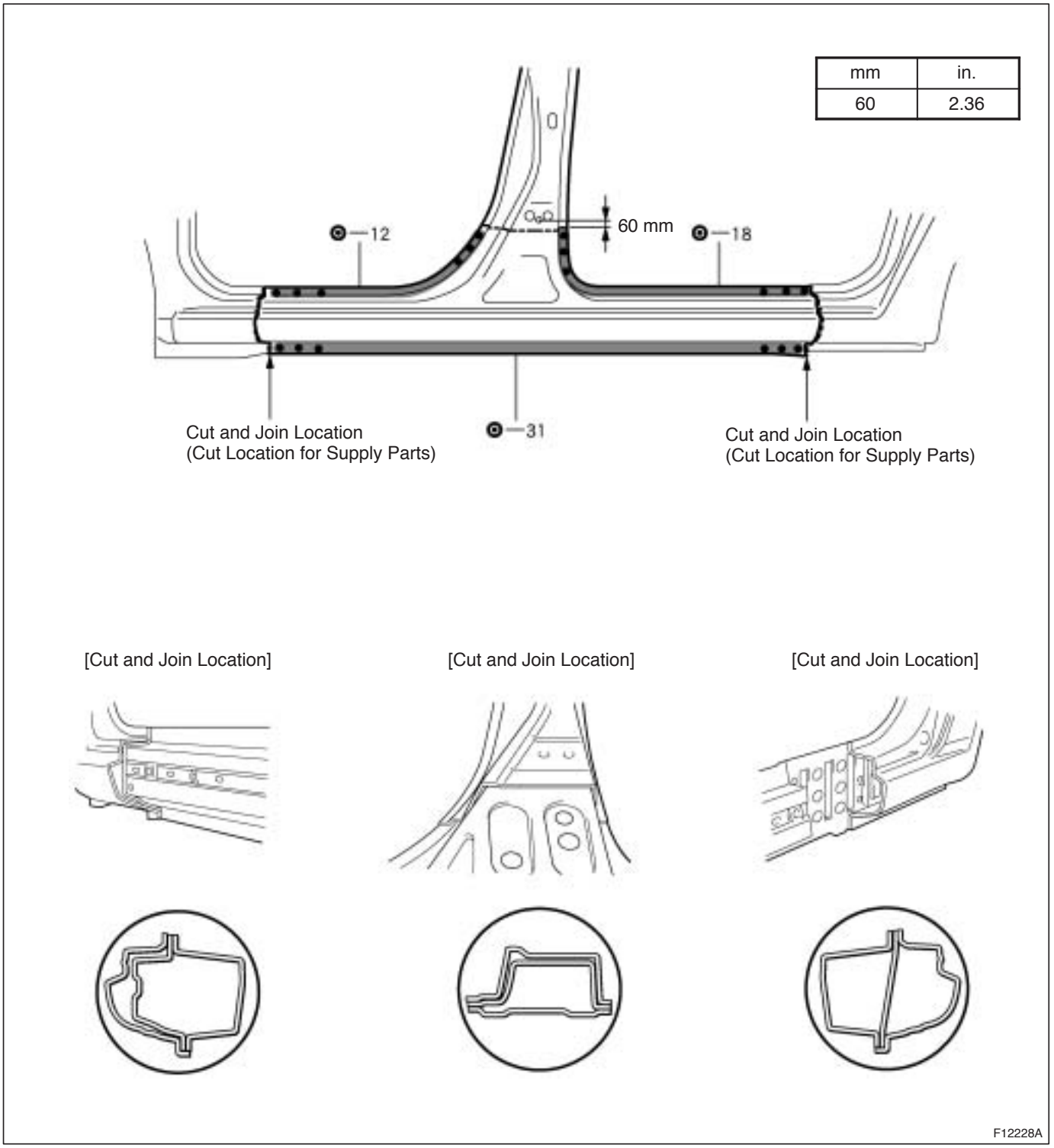

2. INSTALL ROCKER OUTER PANEL

HINT:
Inspect the fitting of the front door, etc., before welding, since this affects the appearance of the finish.

(a) Temporarily install the new parts and measure each part in accordance with the body dimension diagram.

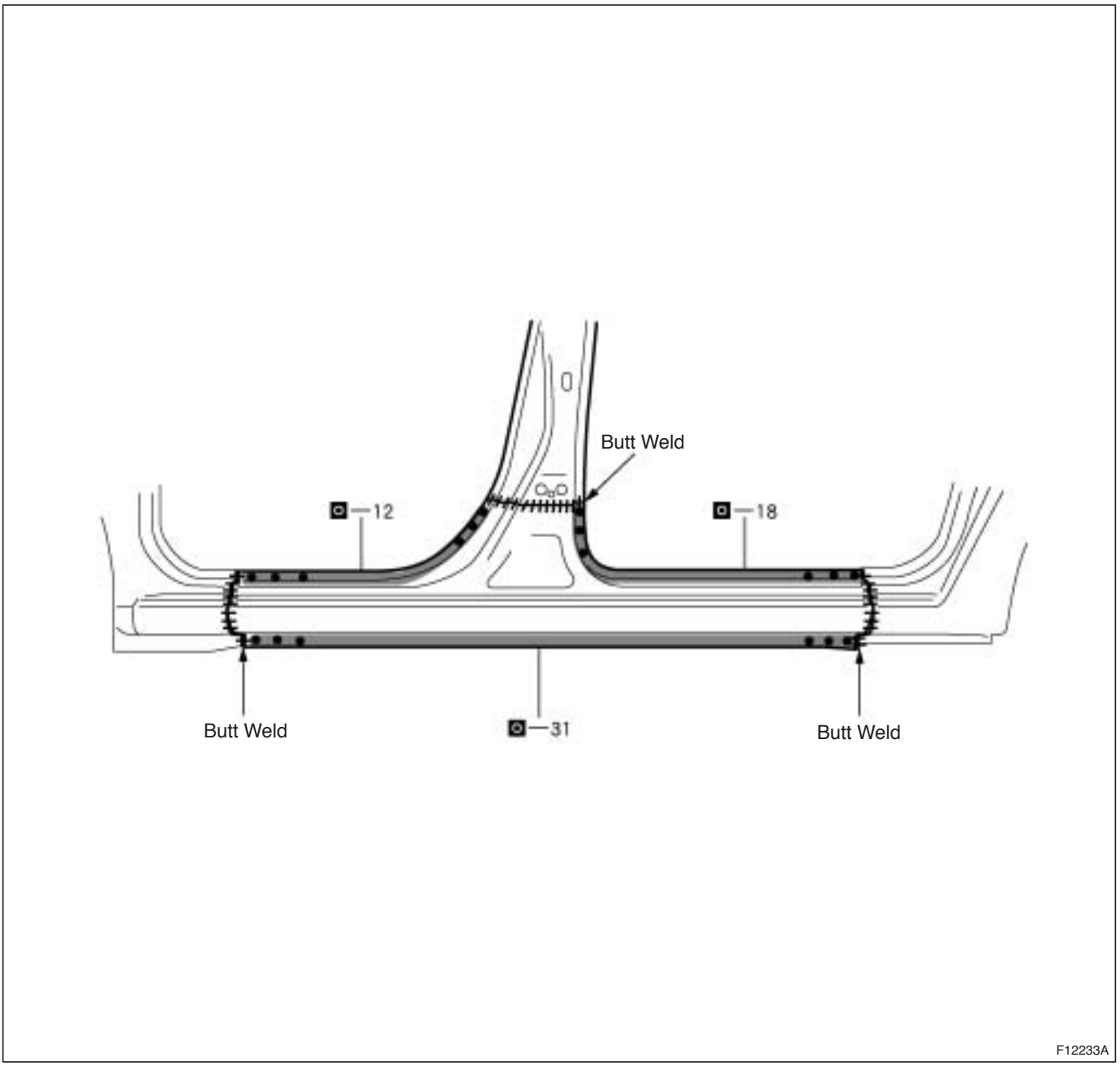

3. MEASURING OPENING PORTION DIMENSIONS (See page BP-94)

4. APPLYING UNDER COATING (See page PC-6)

5. APPLYING ANTI-RUST AGENT

(a) After applying the top coat layer, apply the anti-rust agent to the inside of the necked section structural weld spots.

QUARTER PANEL (CUT)

REPLACEMENT

1. REMOVE QUARTER PANEL

(a) Cut and join the parts at the locations as shown below.

(b) Replace the fuel filler opening lid at the same time.

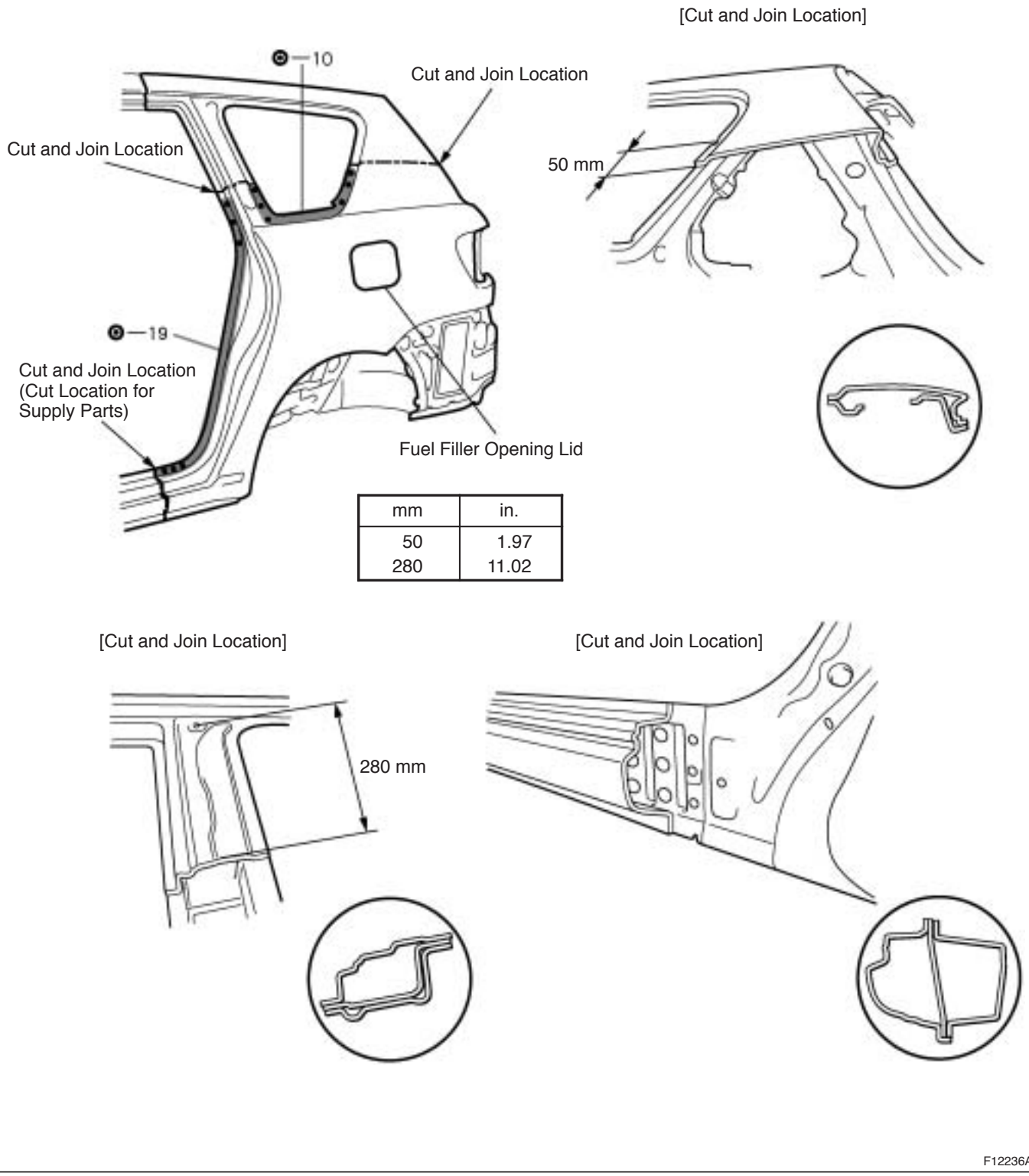

mm	in.
50	1.97
280	11.02

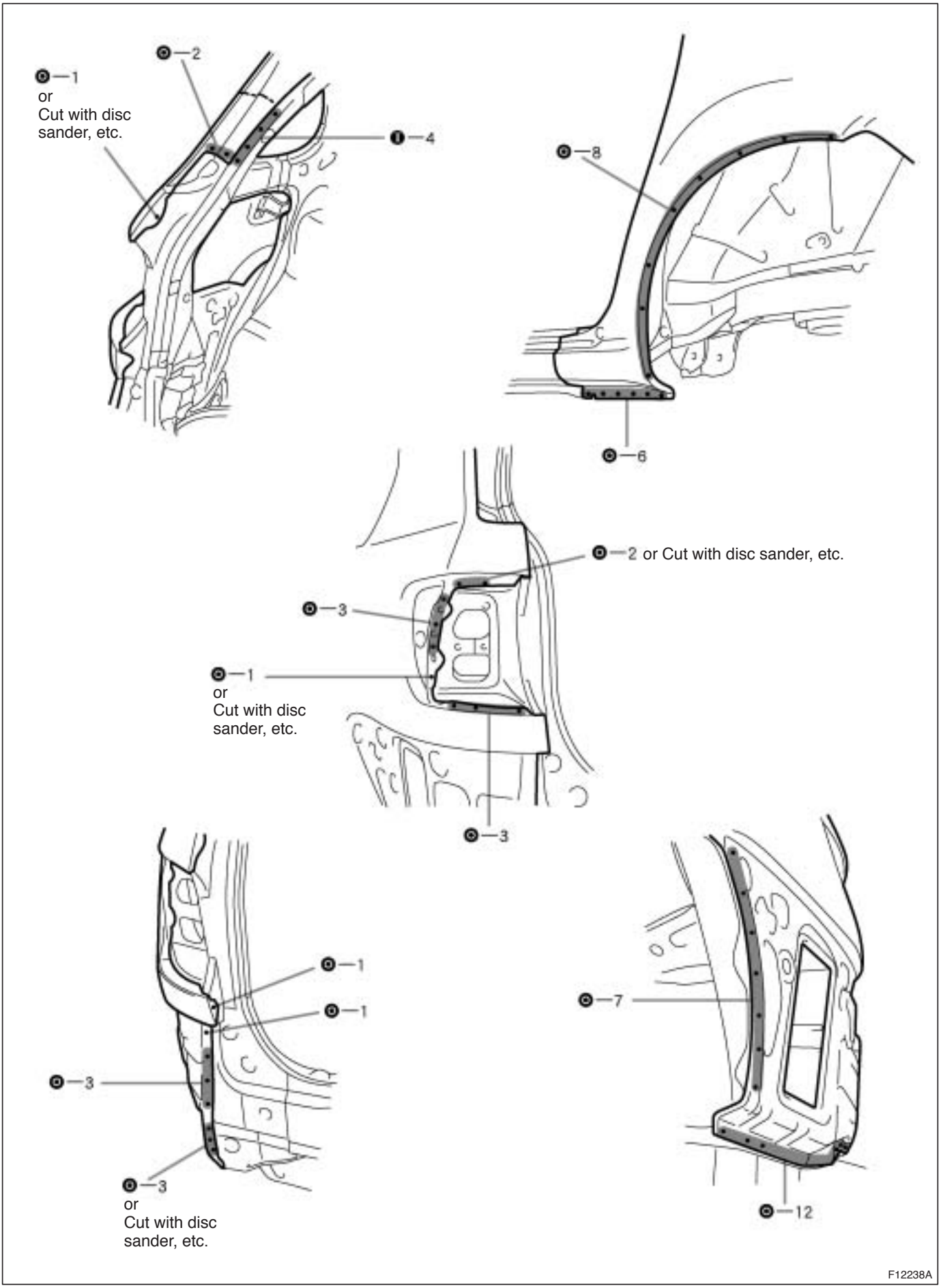
2
1
or
Cut with disc
sander, etc.
4
8
6
2 or Cut with disc sander, etc.
3
1
or
Cut with disc
sander, etc.
3
1
1
3
3
or
Cut with disc
sander, etc.
7
12
F12238A

2. INSTALL QUARTER PANEL

HINT:
Inspect the fitting of the rear door, luggage compartment door and rear combination light, etc., before welding, since this affects the appearance of the finish.

(a) Before temporarily installing the new parts, apply body sealer to the wheel arch.

HINT:
- Apply body sealer about 5 mm (0.20 in.) from the flange, avoiding any oozing.
- Apply seater evenly, about 3 – 4 mm (0.12 – 0.16 in.) in diameter.
- For other sealing points, refer to section PC.

(b) Use waterproof rivets for the fuel filler opening lid installation.

HINT:
Apply the body sealer before installing the fuel filler opening lid.

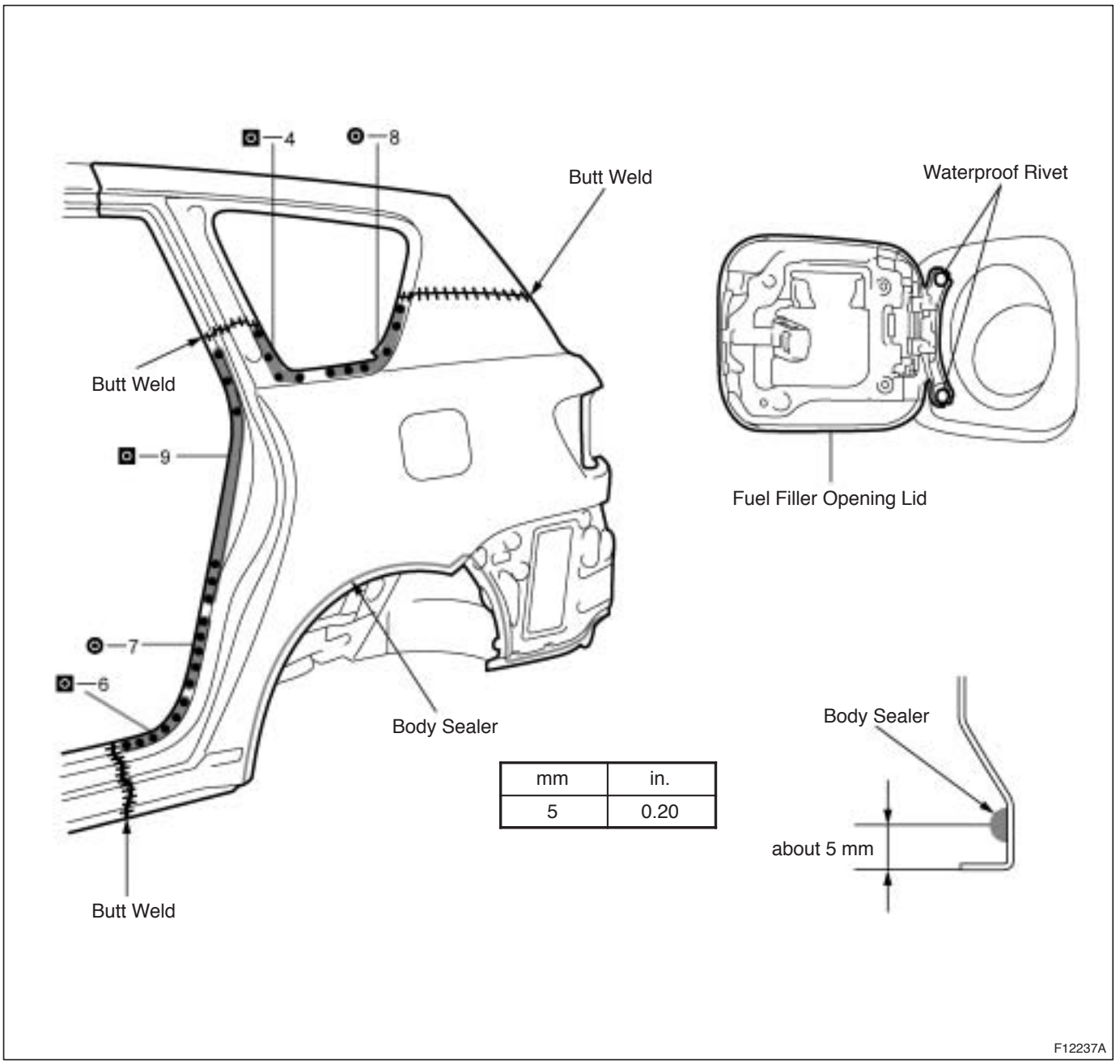

mm	in.
5	0.20

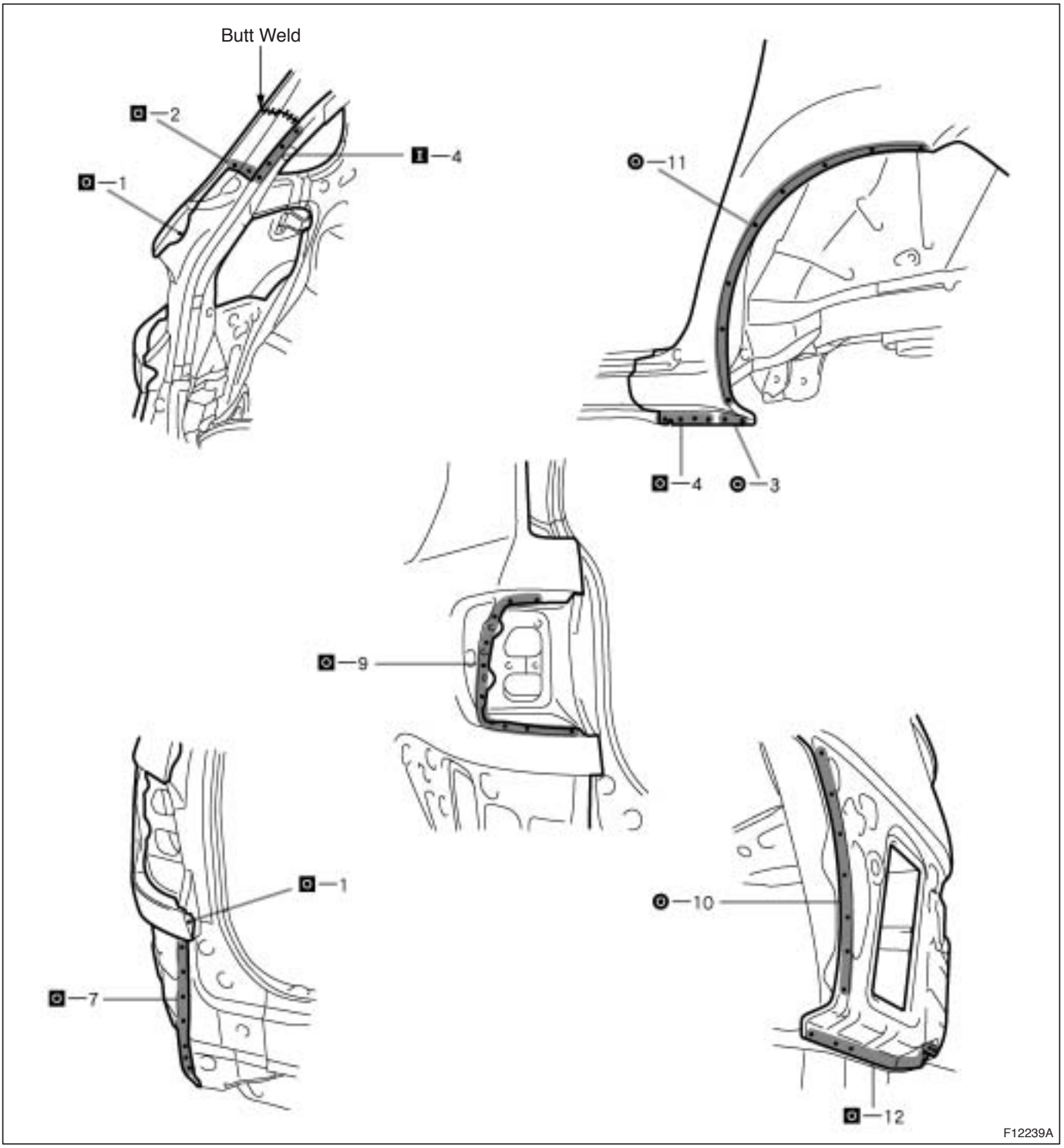

3. **MEASURING OPENING PORTION DIMENSIONS** (See page BP-94)
4. **APPLYING SEALER TO THE ENGINE COMPARTMENT** (See page PC-1)
4. **APPLYING SEALER TO THE INSIDE OF THE VEHICLE** (See page PC-1)
5. **APPLYING SEALER TO THE REAR LUGGAGE COMPARTMENT** (See page PC-1)
6. **APPLYING UNDER COATING** (See page PC-6)
7. **CHARGING THE POLYURTHANE FOAM** (See page PC-8)
8. **APPLYING ANTI-RUST AGENT**

(a) After applying the top coat layer, apply the anti-rust agent to the inside of the necked section structural weld spots.

QUARTER WHEEL HOUSING OUTER PANEL (ASSY)

REPLACEMENT

1. **REMOVE QUARTER PANEL (See page BP-47)**
2. **REMOVE QUARTER WHEEL HOUSING OUTER PANEL**

(a) Cut and join the quarter rock pillar at the location as shown below.

(b) After removing the quarter rock pillar, remove the quarter wheel house outer panel.

[LH]

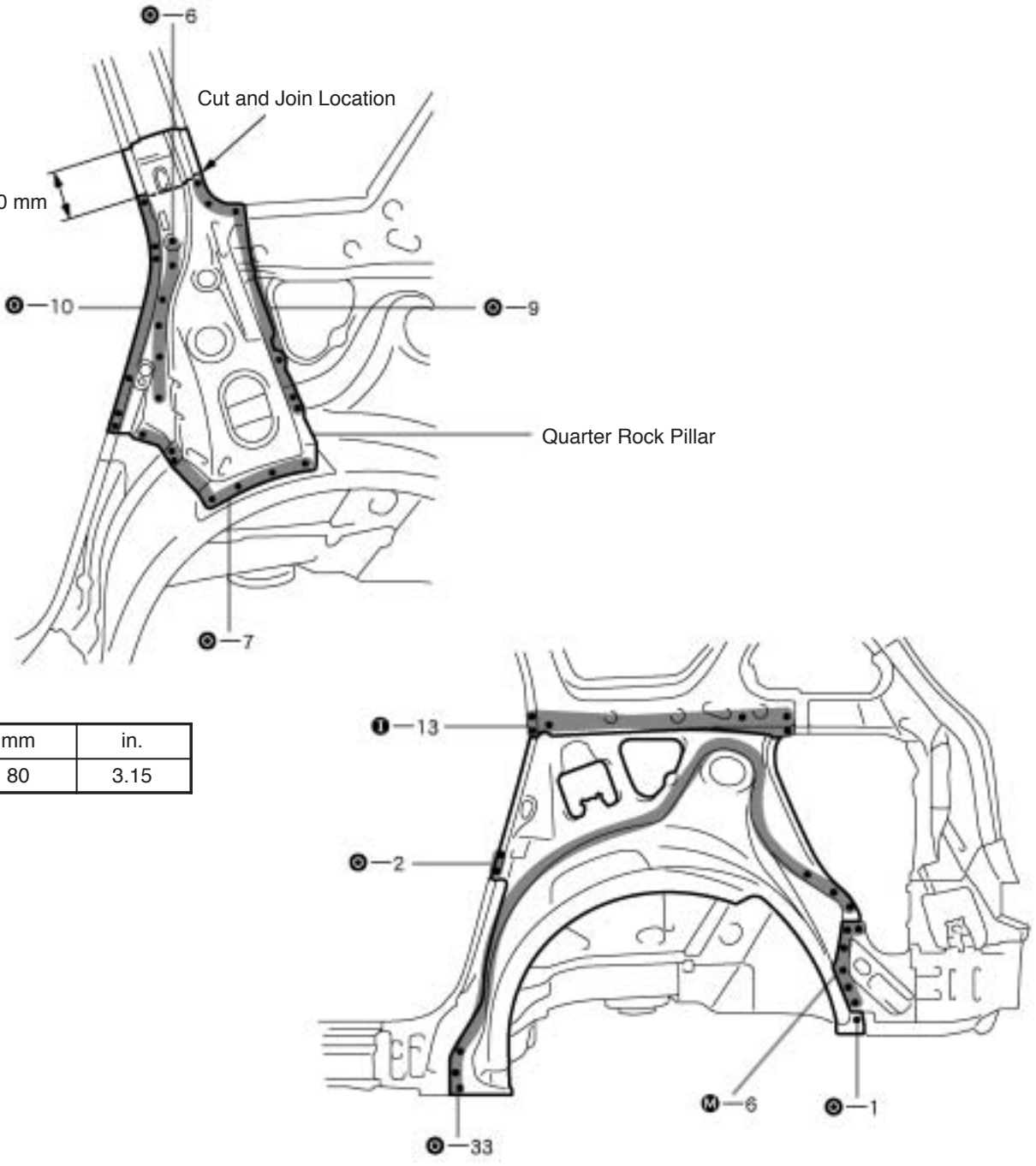

mm	in.
80	3.15

F12240A

[RH]

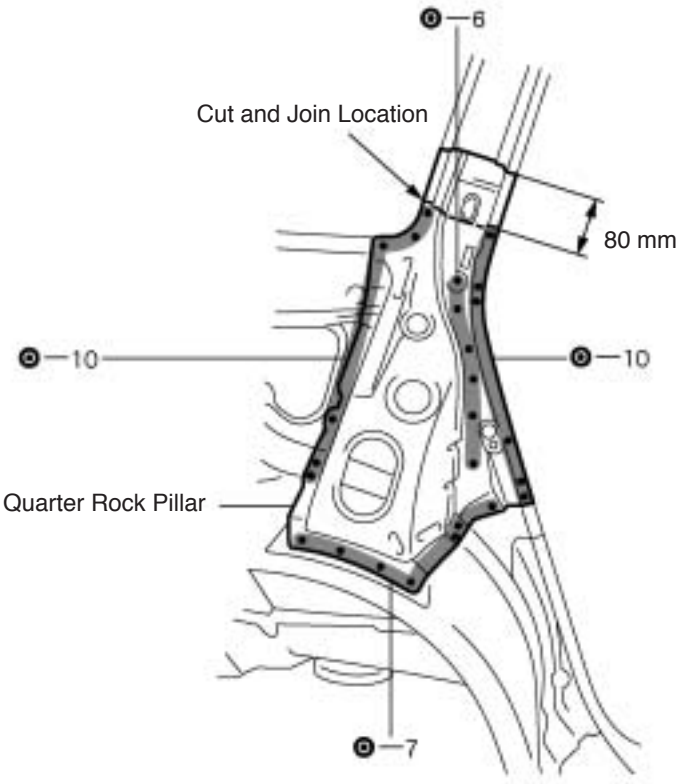

mm	in.
80	3.15

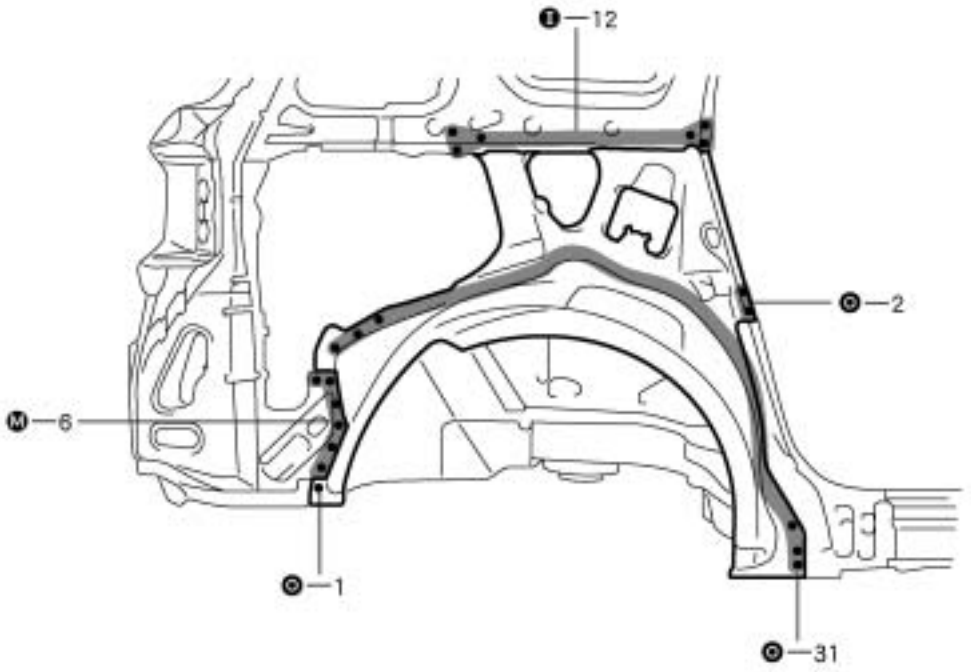

F12241A

3. INSTALL QUARTER WHEEL HOUSING OUTER PANEL

HINT:
Temporarily install the quarter panel and inspect the fitting before welding, since this affects the appearance of the finish.

(a) Determine the position of the new parts by the assembly marks of the inner and outer panels.

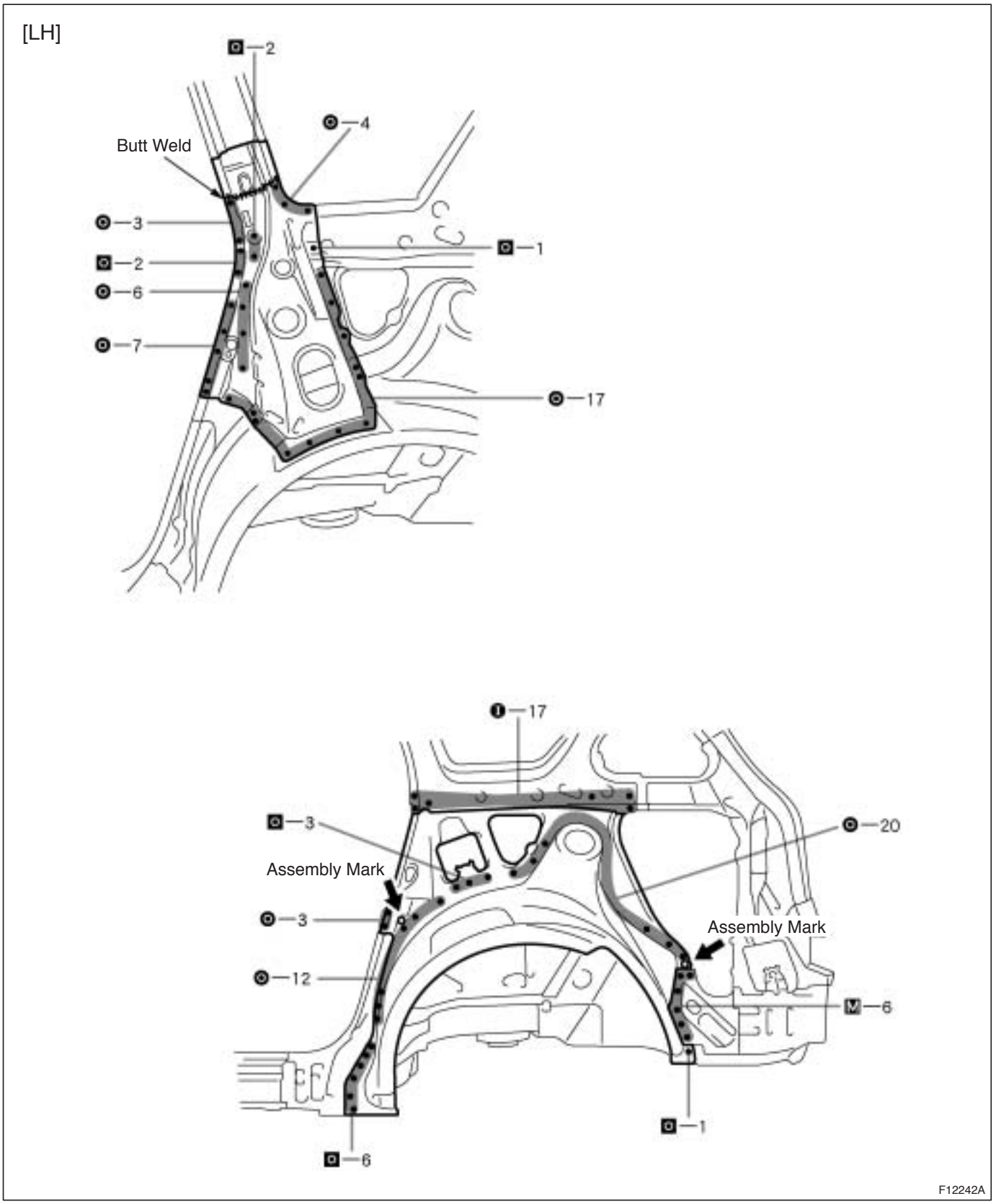

[RH]

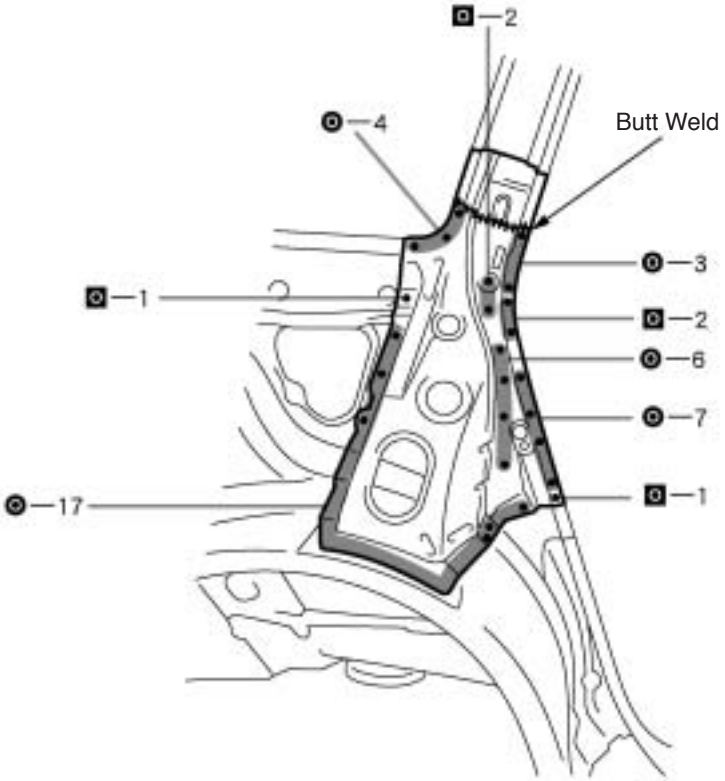
2
4
Butt Weld
3
1
2
6
7
17
1

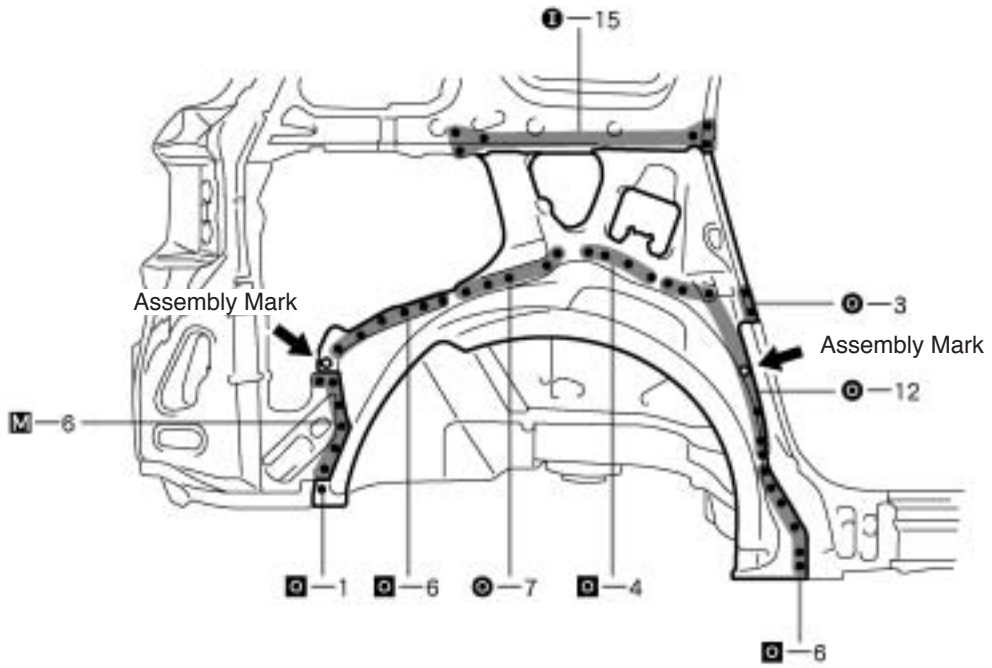
15
Assembly Mark
3
Assembly Mark
12
6
1
6
7
4
6

F12243A

4. **INSTALL QUARTER PANEL (See page BP-47)**
5. **APPLYING SEALER TO THE INSIDE OF THE VEHICLE (See page PC-1)**
6. **APPLYING SEALER TO THE REAR LUGGAGE COMPARTMENT (See page PC-1)**
7. **APPLYING UNDER COATING (See page PC-6)**
8. **APPLYING ANTI-RUST AGENT**

(a) After applying the top coat layer, apply the anti-rust agent to the inside of the necked section structural weld spots.

BODY LOWER BACK PANEL (ASSY)

REPLACEMENT

1. REMOVE BODY LOWER BACK PANEL

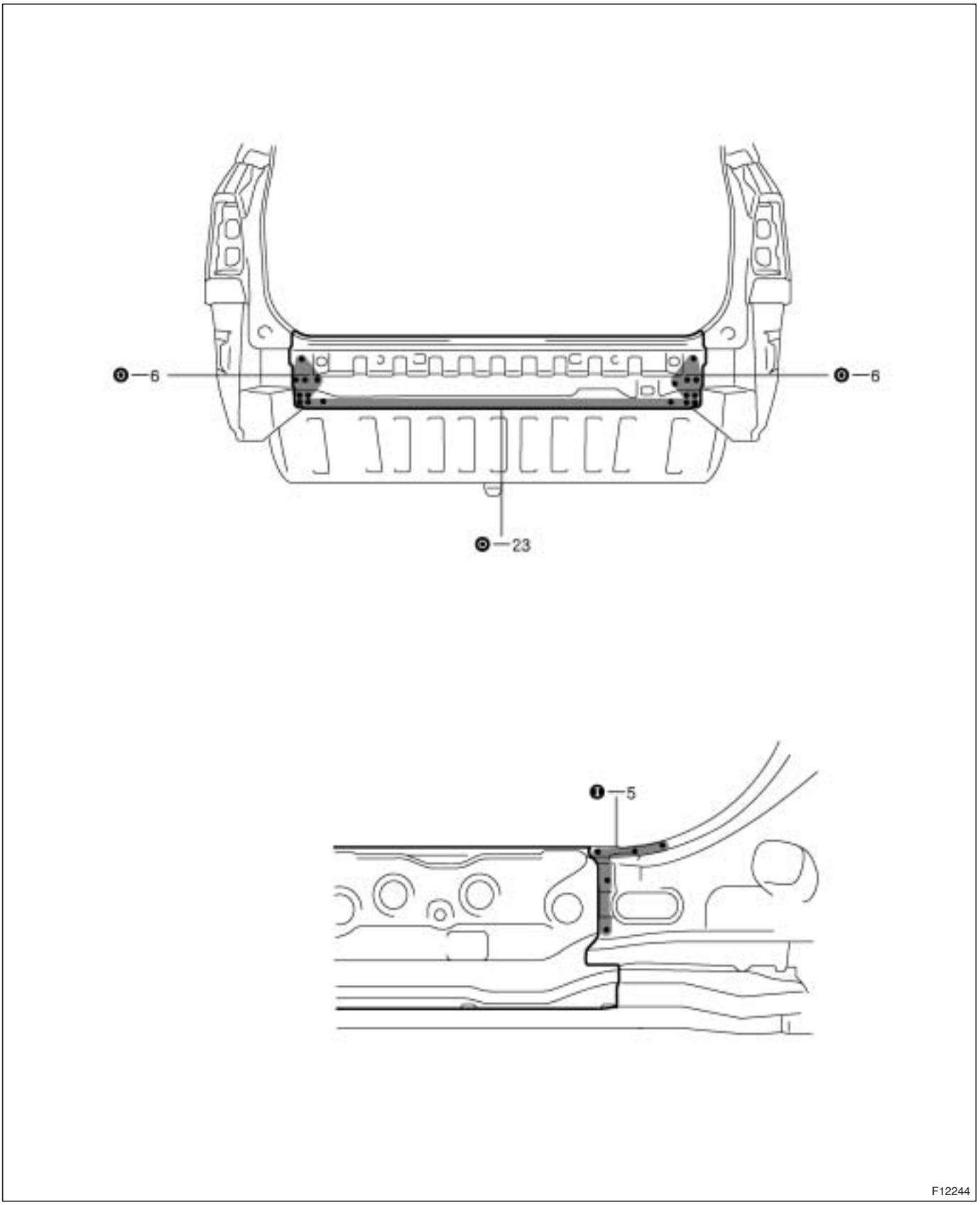

2. INSTALL BODY LOWER BACK PANEL

HINT:
Inspect the fitting of the back door since this affects the appearance of the finish.

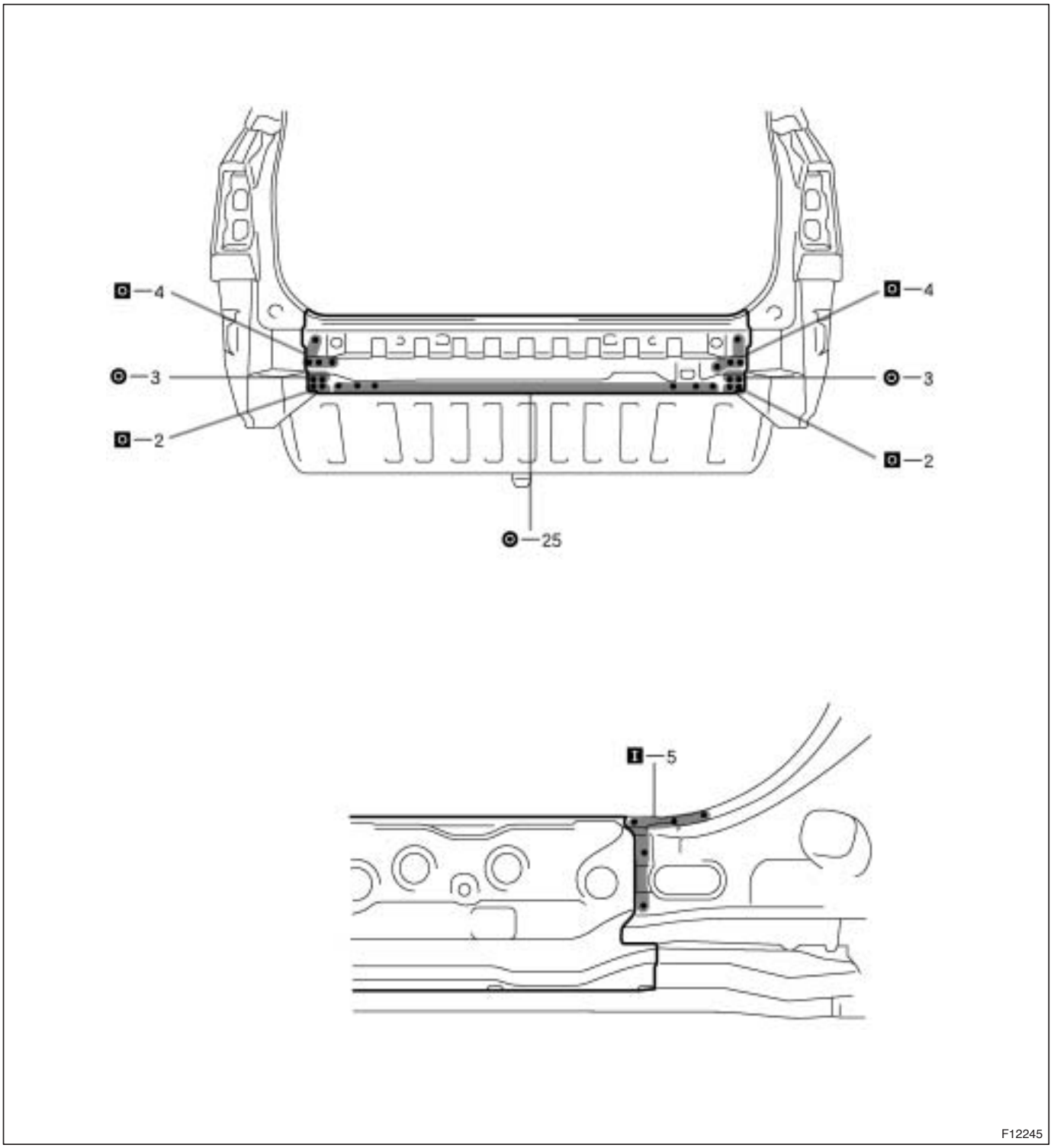

3. MEASURING OPENING PORTION DIMENSIONS (See page BP-94)

4. APPLYING SEALER TO THE REAR LUGGAGE COMPARTMENT (See page PC-1)

5. APPLYING UNDER COATING (See page PC-6)

6. APPLYING ANTI-RUST AGENT

(a) After applying the top coat layer, apply the anti-rust agent to the inside of the necked section structural weld spots.

REAR FLOOR PAN (ASSY)

REPLACEMENT

1. **REMOVE BODY LOWER BACK PANEL (See page BP-56)**
2. **REMOVE REAR FLOOR PAN (See page BP-58)**

(a) Remove the rear floor pan reinforcement, rear floor brace bracket at the same time.

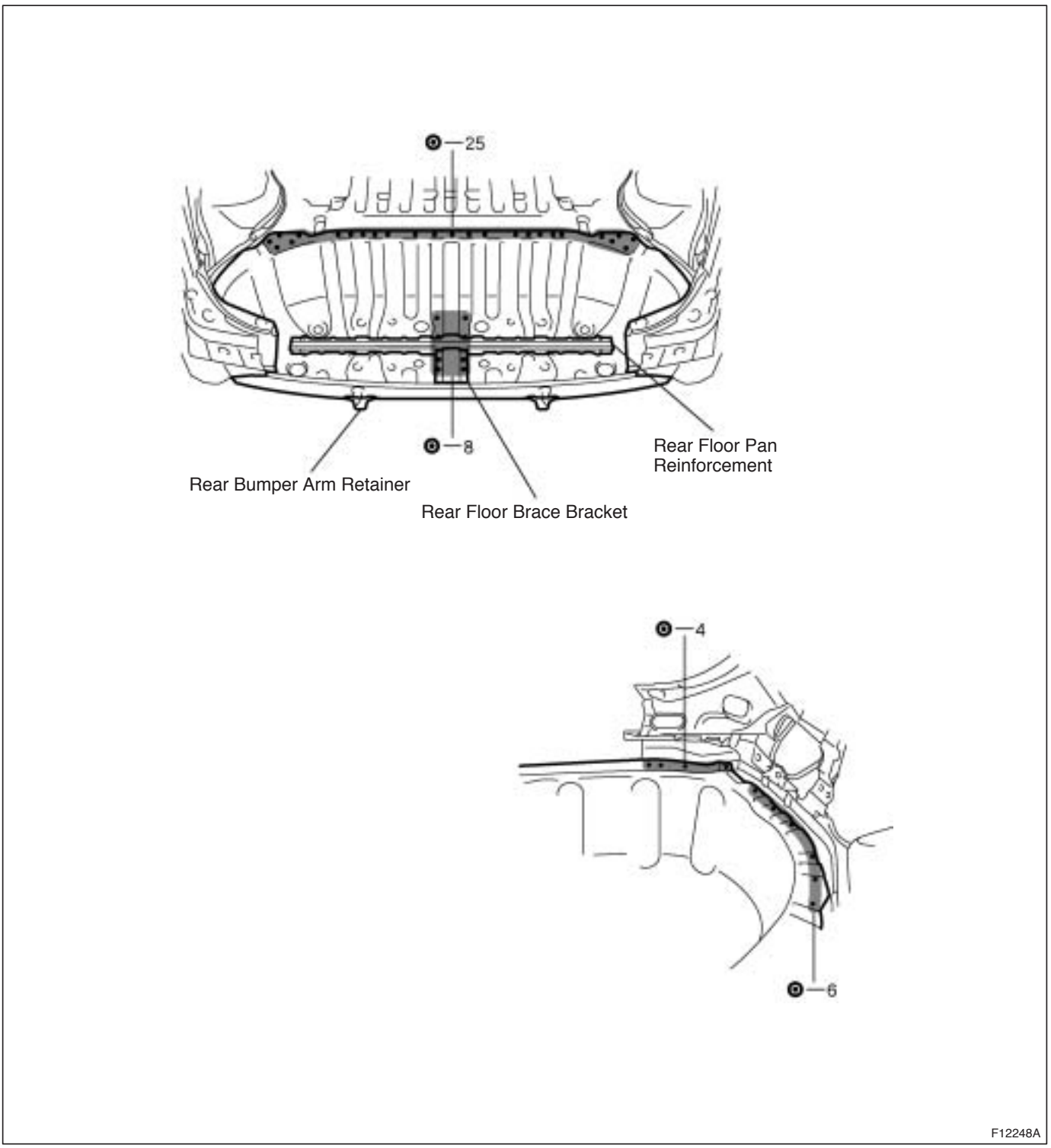

3. INSTALL REAR FLOOR PAN

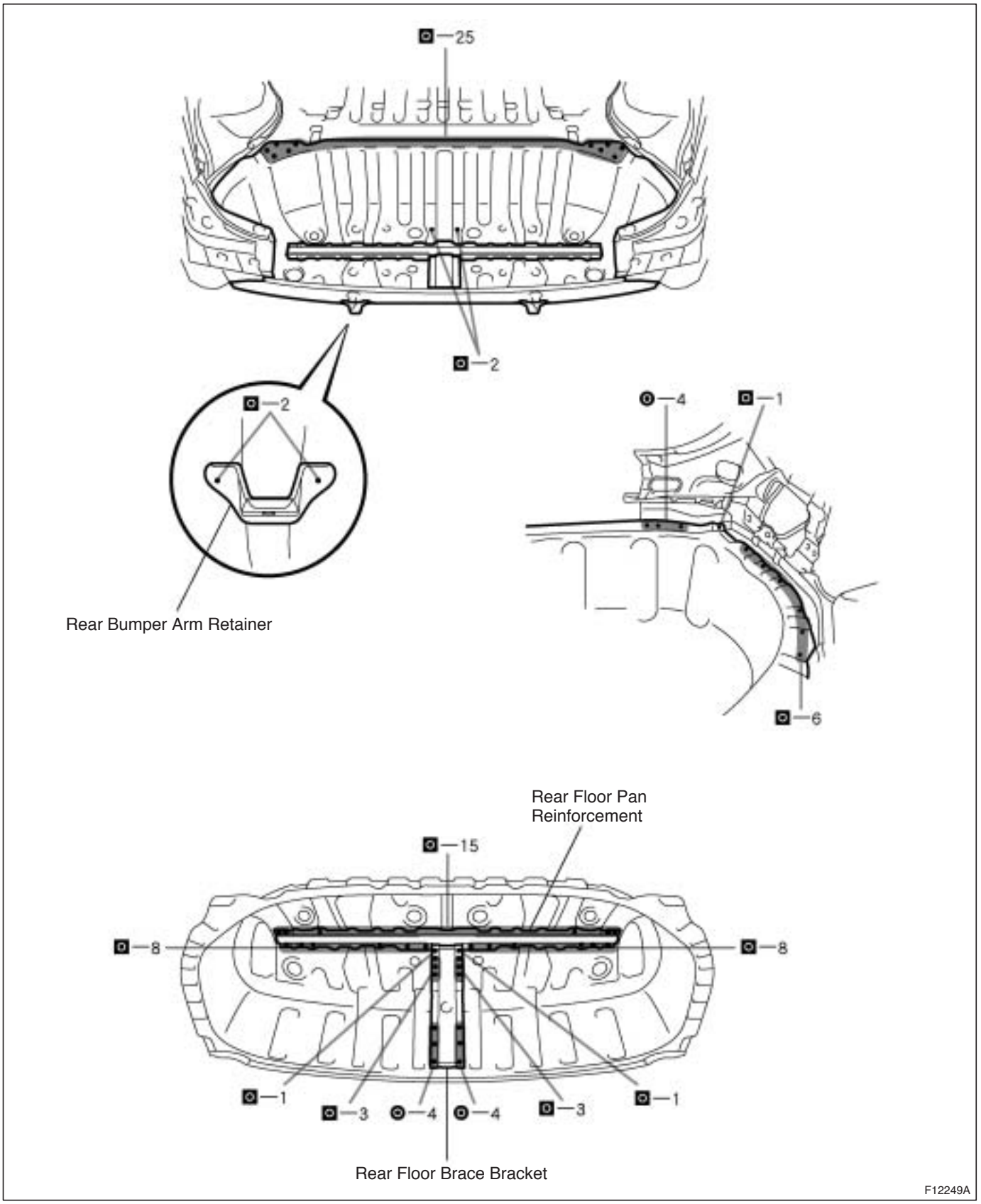

4. **INSTALL BODY LOWER BACK PANEL (See page BP-56)**
5. **APPLYING SEALER TO THE REAR LUGGAGE COMPARTMENT (See page PC-1)**
6. **APPLYING UNDER COATING (See page PC-6)**
7. **REPLACEMENT SILENCER SHEET (See page PC-9)**
8. **APPLYING ANTI-RUST AGENT**

(a) After applying the top coat layer, apply the anti-rust agent to the inside of the necked section structural weld spots.

JACK UP BRACKET (ASSY)

REPLACEMENT

1. REMOVE BODY LOWER BACK PANEL (See page BP-56)
2. REMOVE REAR FLOOR PAN (See page BP-58)
3. REMOVE JACK UP BRACKET

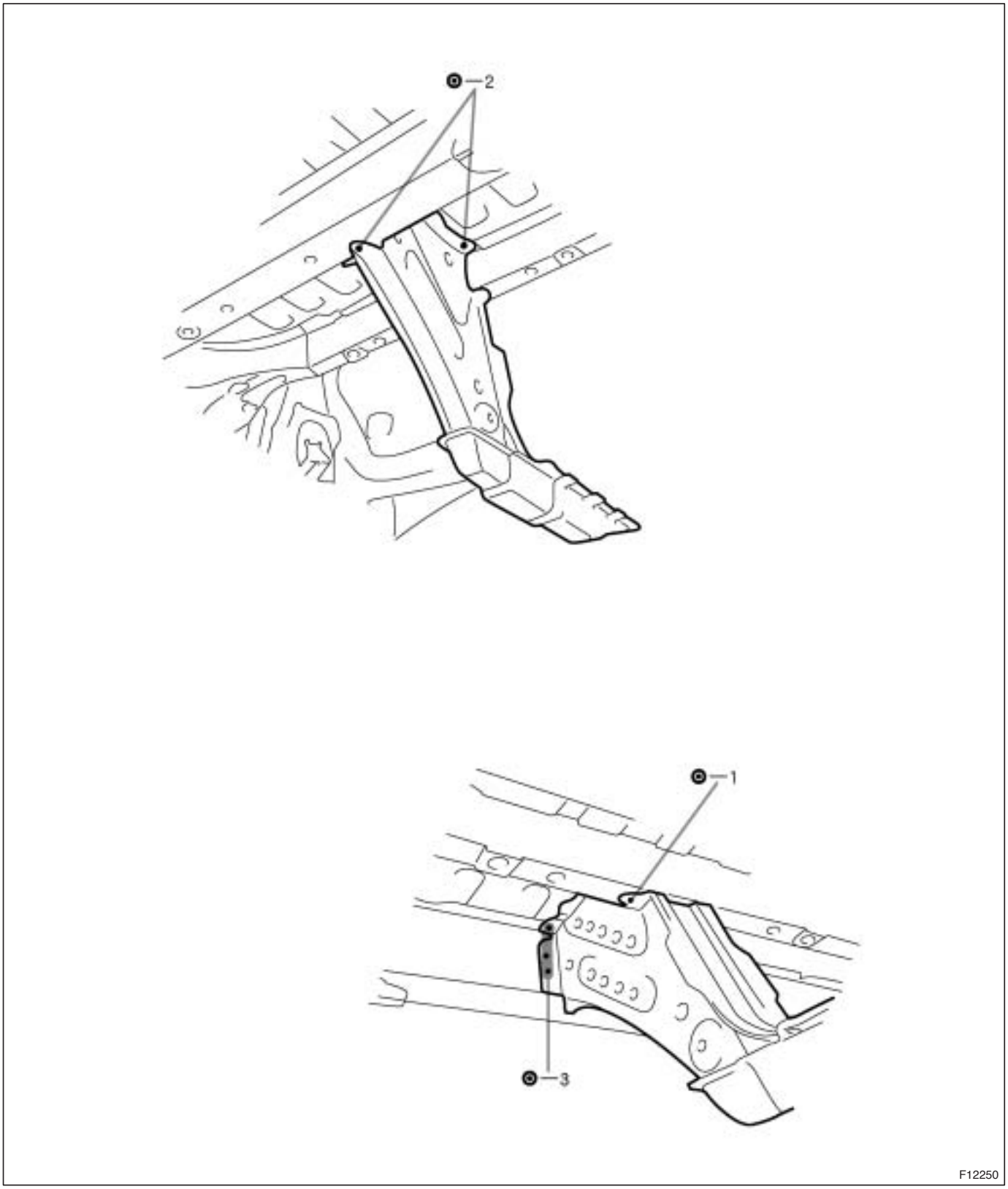

4. INSTALL JACK UP BRACKET

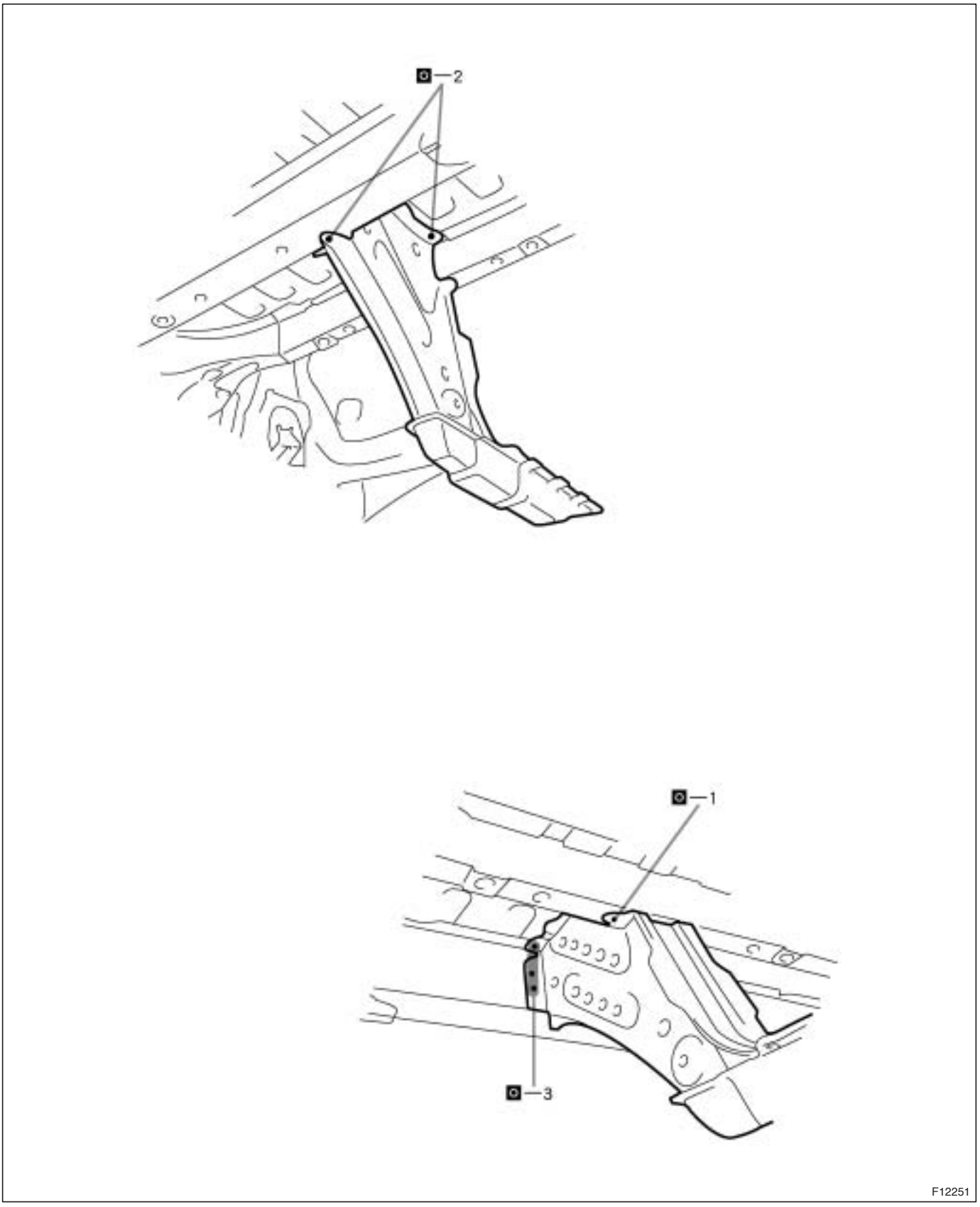

5. **INSTALL REAR FLOOR PAN (See page BP-58)**
6. **INSTALL BODY LOWER BACK PANEL (See page BP-56)**
7. **APPLYING SEALER TO THE REAR LUGGAGE COMPARTMENT (See page PC-1)**
8. **APPLYING UNDER COATING (See page PC-6)**
9. **MEASURING OPENING PORTION DIMENSIONS (See page BP-94)**
10. **APPLYING ANTI-RUST AGENT**

(a) After applying the top coat layer, apply the anti-rust agent to the inside of the necked section structural weld spots.

REAR FLOOR NO.4 CROSSMEMBER (ASSY)

REPLACEMENT

1. REMOVE BODY LOWER BACK PANEL (See page BP-56)
2. REMOVE JACK UP BRACKET (See page BP-61)
3. REMOVE REAR FLOOR NO.4 CROSSMEMBER

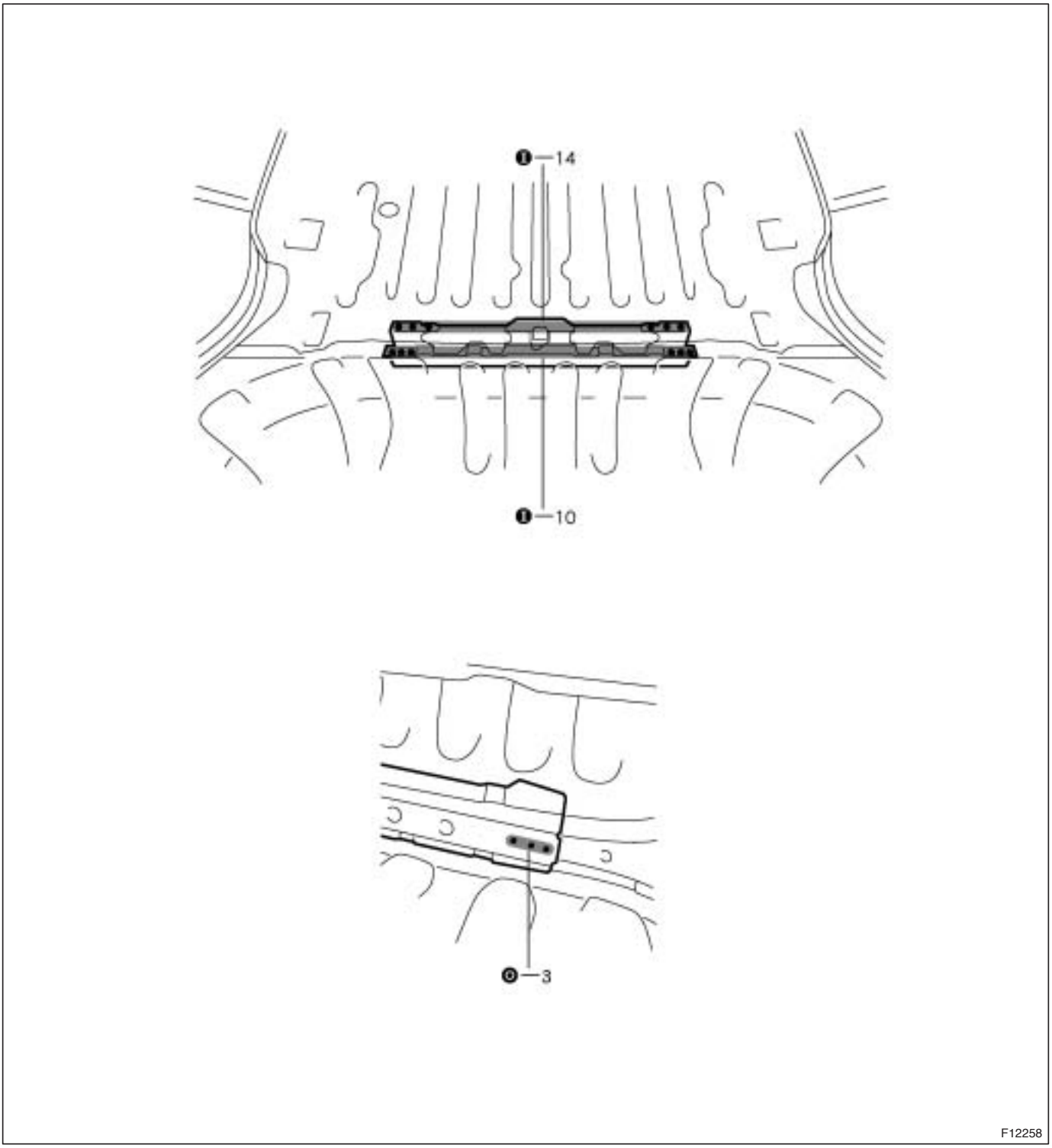

4. INSTALL REAR FLOOR NO.4 CROSSMEMBER

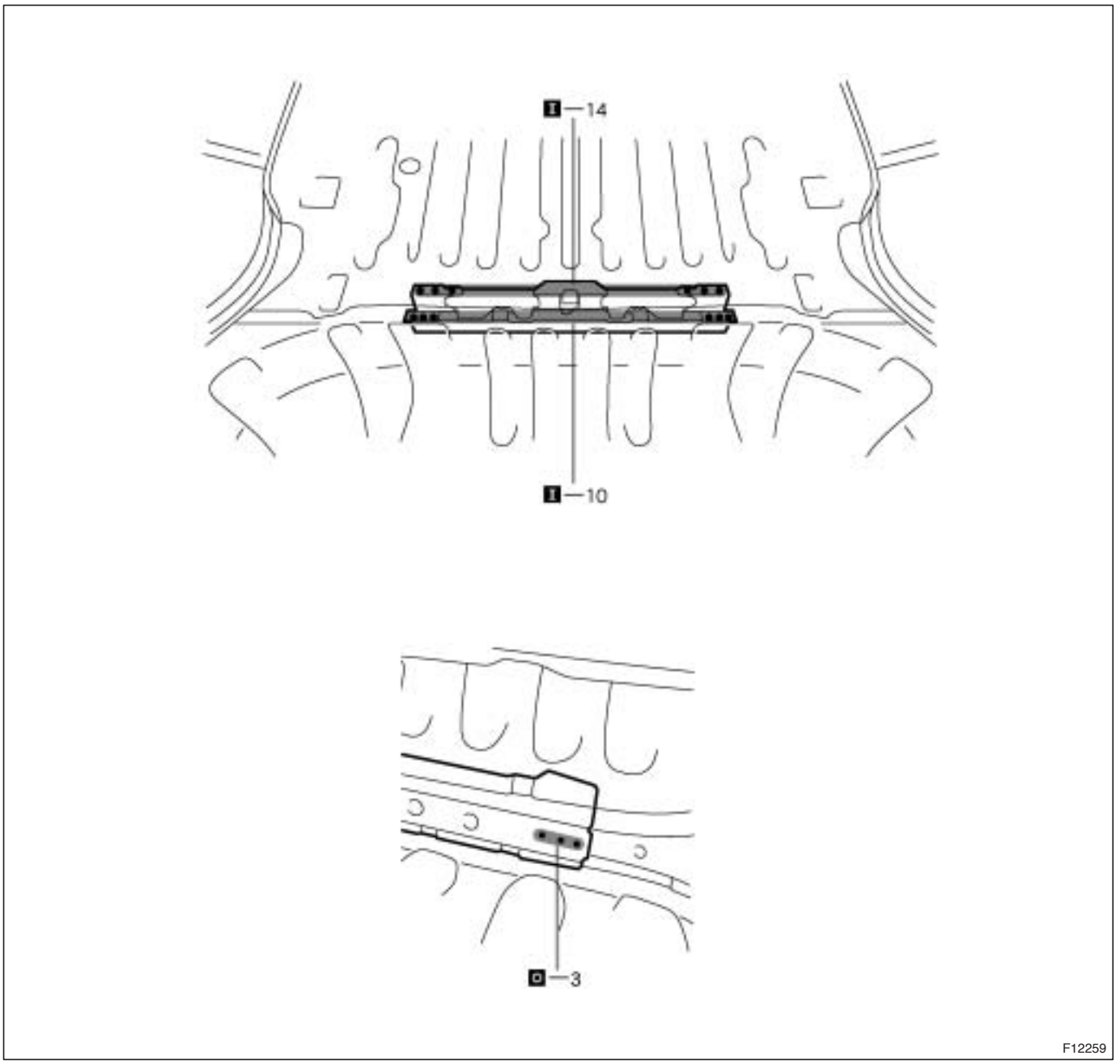

5. MEASURING THE UNDER BODY DIMENSIONS (See page BP-94)
6. INSTALL JACK UP BRACKET (See page BP-61)
7. INSTALL BODY LOWER BACK PANEL (See page BP-56)
8. APPLYING SEALER TO THE REAR LUGGAGE COMPARTMENT (See page PC-1)
9. APPLYING UNDER COATING (See page PC-6)
10. REPLACEMENT SILENCER SHEET (See page PC-9)
11. APPLYING ANTI-RUST AGENT

(a) After applying the top coat layer, apply the anti-rust agent to the inside of the necked section structural weld spots.

REAR FLOOR NO.3 CROSSMEMBER (ASSY)

REPLACEMENT

1. REMOVE REAR FLOOR NO.3 CROSSMEMBER

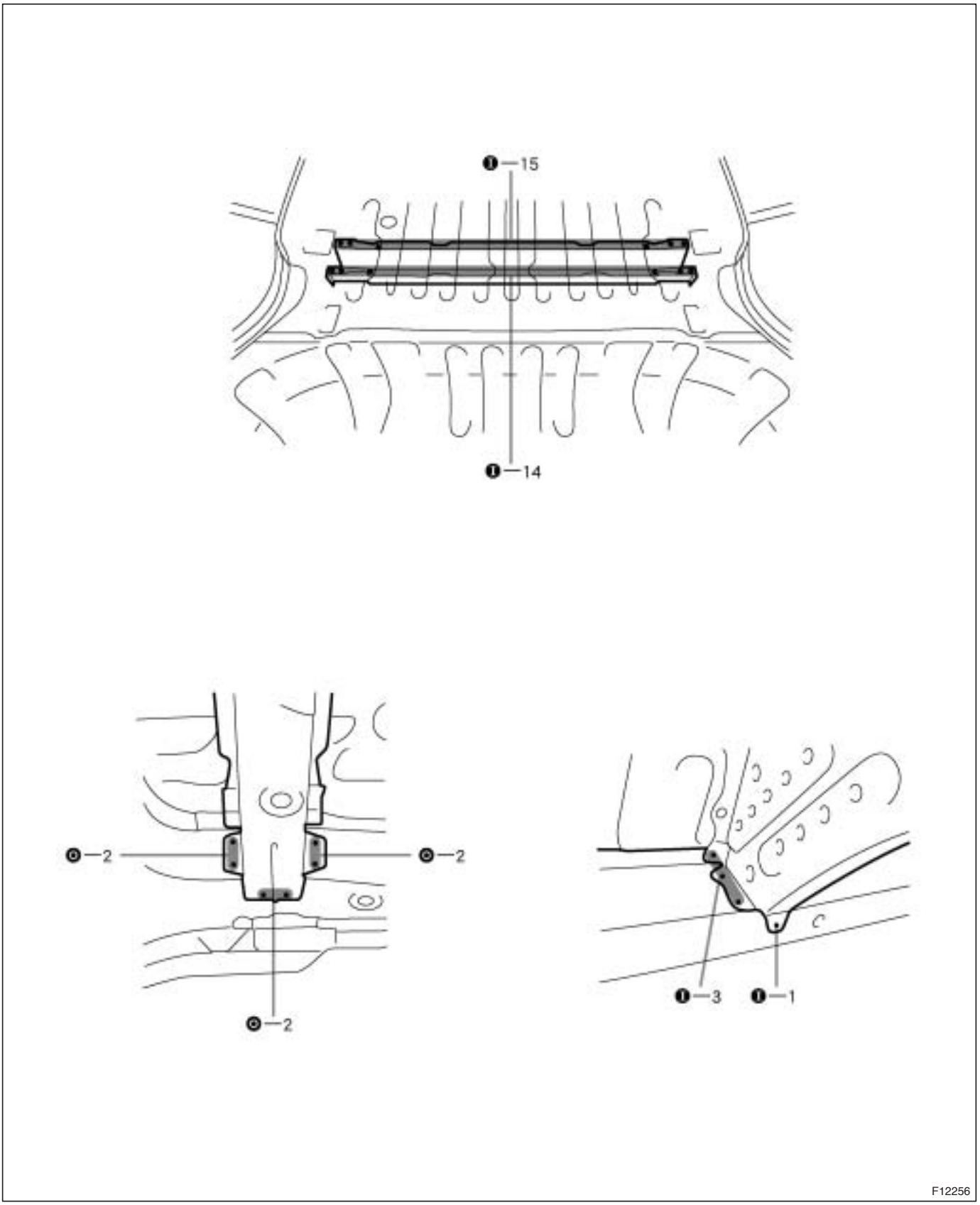

2. INSTALL REAR FLOOR NO.3 CROSSMEMBER

(a) Temporarily install the new parts and measure each part in accordance with the body dimension diagram.

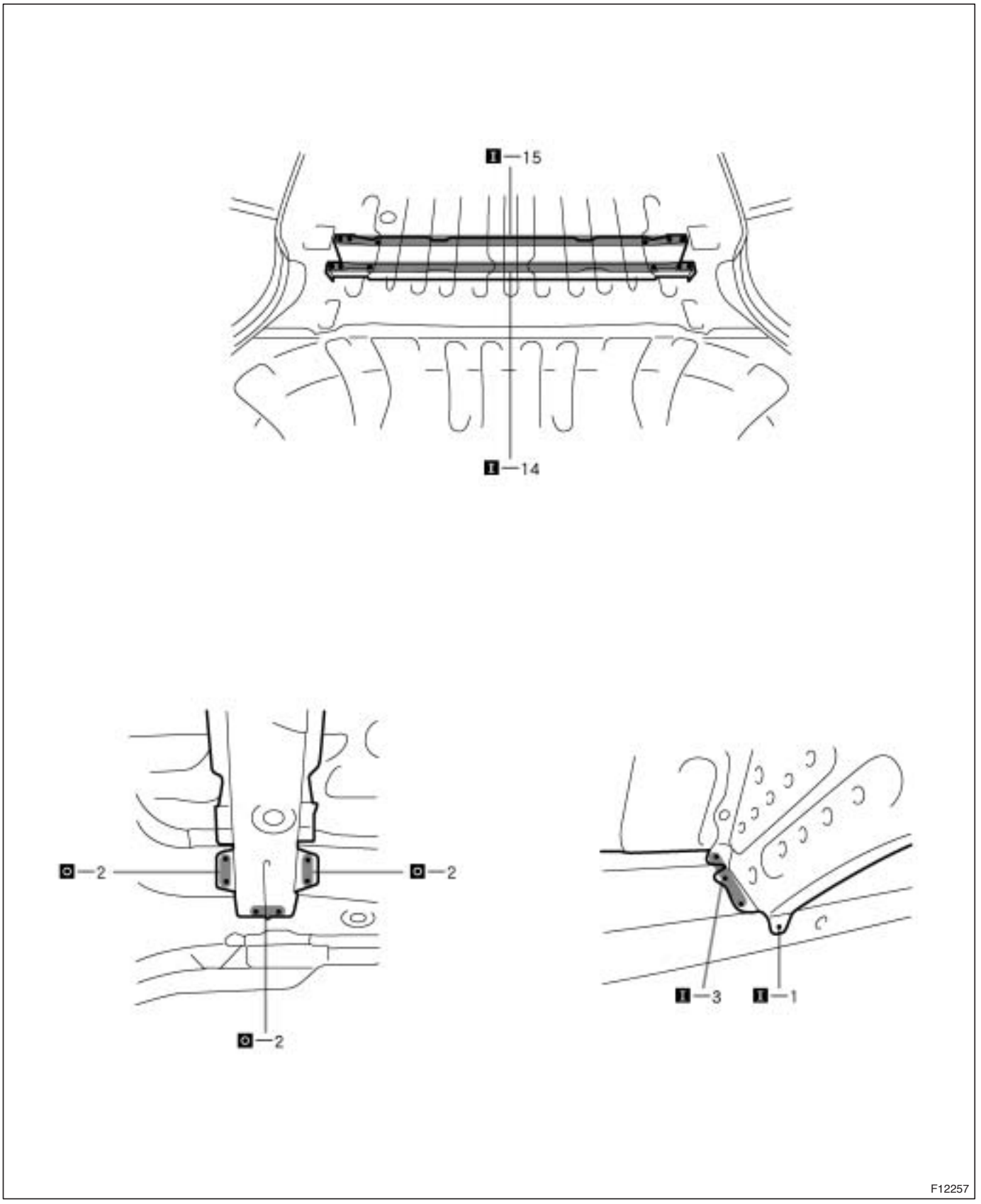

3. MEASURING THE UNDER BODY DIMENSIONS (See page BP-94)

4. APPLYING SEALER TO THE REAR LUGGAGE COMPARTMENT (See page PC-1)

5. APPLYING UNDER COATING (See page PC-6)

6. REPLACEMENT SILENCER SHEET (See page PC-9)

7. APPLYING ANTI-RUST AGENT

(a) After applying the top coat layer, apply the anti-rust agent to the inside of the necked section structural weld spots.

BACK DOOR OPENING TROUGH (ASSY)

REPLACEMENT

1. **REMOVE QUARTER PANEL (See page BP-47)**
2. **REMOVE BACK DOOR OPENING TROUGH**

(a) Remove the quarter panel outer extension at the same time.

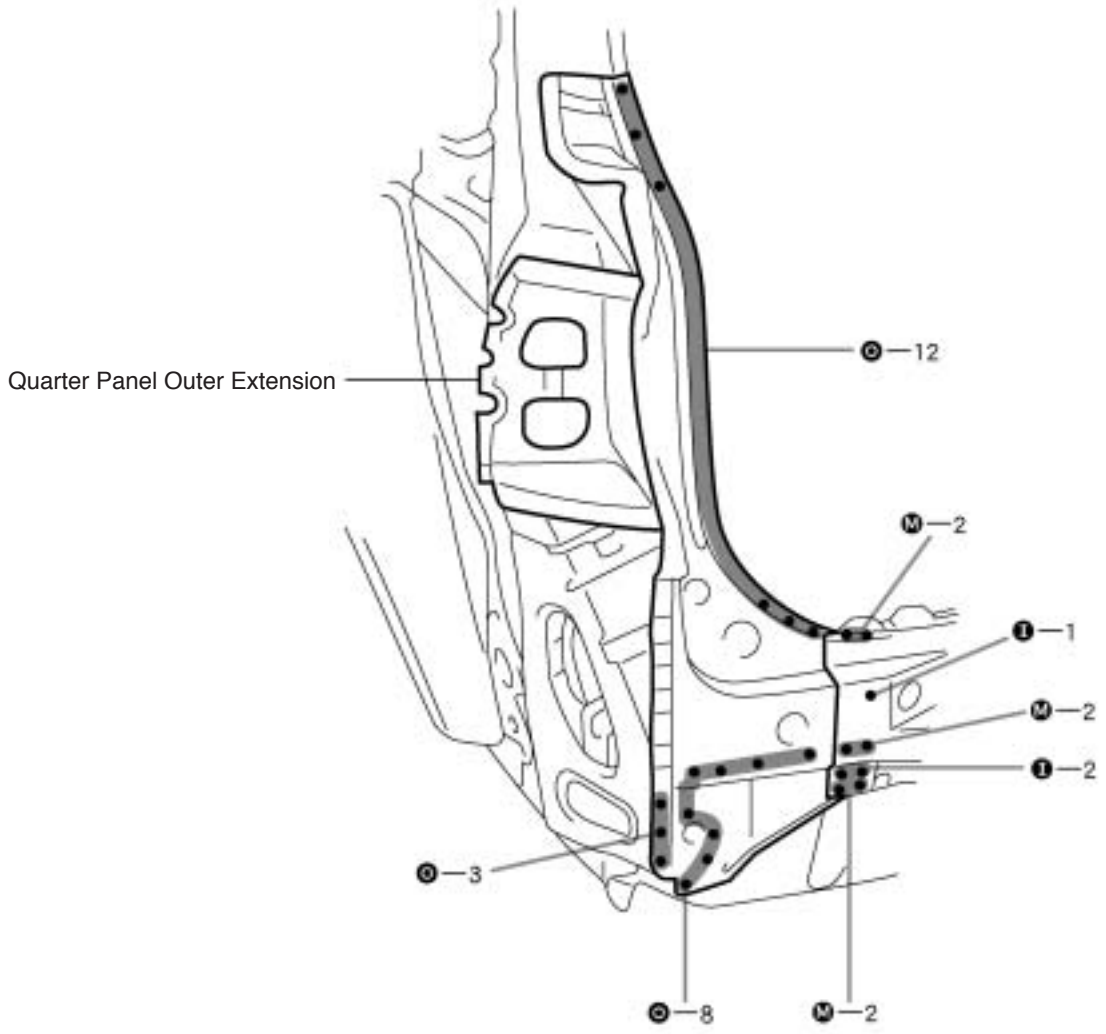

3. INSTALL BACK DOOR OPENING TROUGH

HINT:
Inspect the fitting of the quarter panel back door and rear combination light, etc., before welding, since this affects the appearance of the finish.

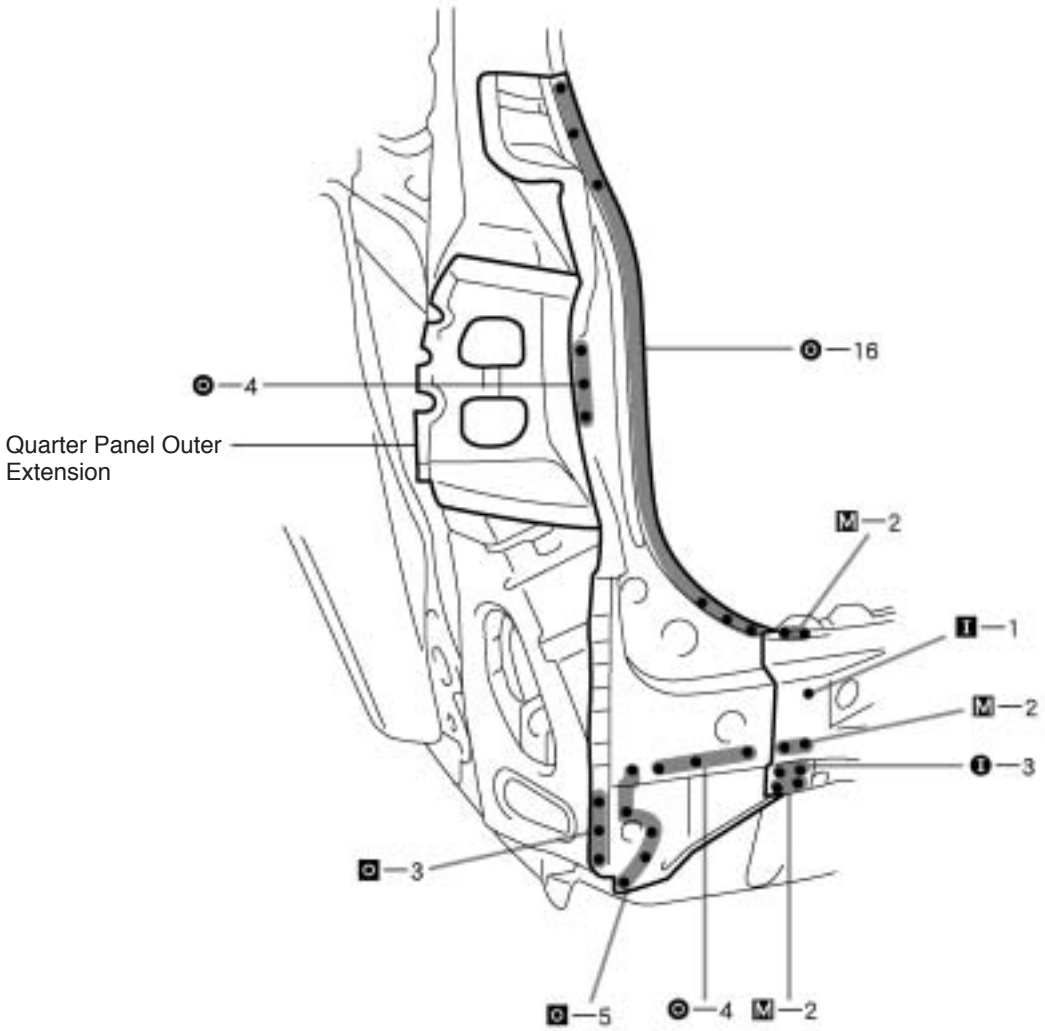

F12247A

4. **MEASURING OPENING PORTION DIMENSIONS (See page BP-94)**
5. **INSTALL QUARTER PANEL**
6. **APPLYING SEALER TO THE INSIDE OF THE VEHICLE (See page PC-1)**
7. **APPLYING SEALER TO THE REAR LUGGAGE COMPARTMENT (See page PC-1)**
8. **APPLYING UNDER COATING (See page PC-6)**
9. **APPLYING ANTI-RUST AGENT**

(a) After applying the top coat layer, apply the anti-rust agent to the inside of the necked section structural weld spots.

BACK DOOR OPENING LOWER REINFORCEMENT (ASSY)

REPLACEMENT

1. REMOVE QUARTER PANEL (See page BP-47)
2. REMOVE BODY LOWER BACK PANEL (See page BP-56)
3. REMOVE BACK DOOR OPENING TROUGH (See page BP-69)
4. REMOVE BACK DOOR OPENING LOWER REINFORCEMENT

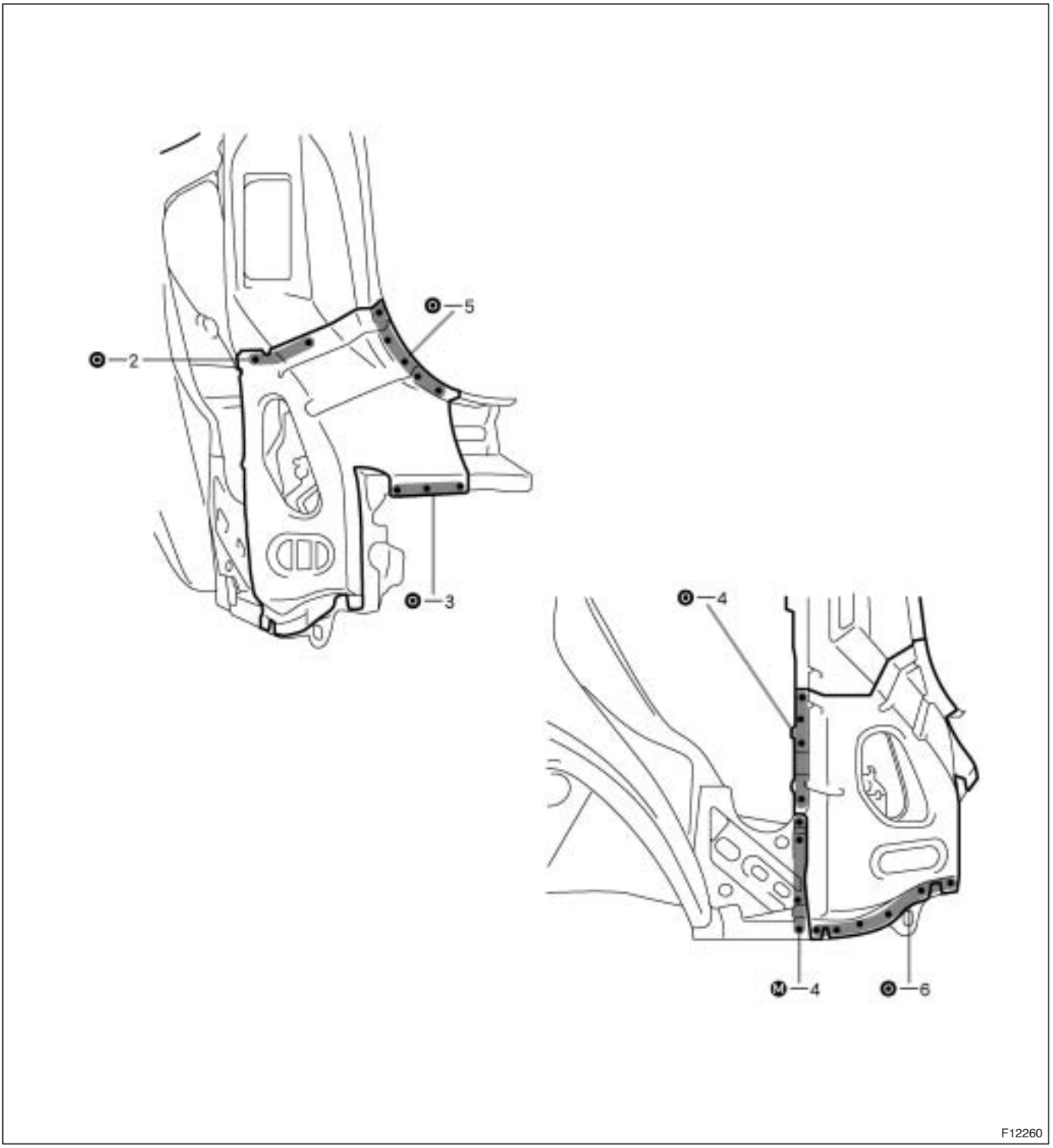

5. INSTALL BACK DOOR OPENING LOWER REINFORCEMENT

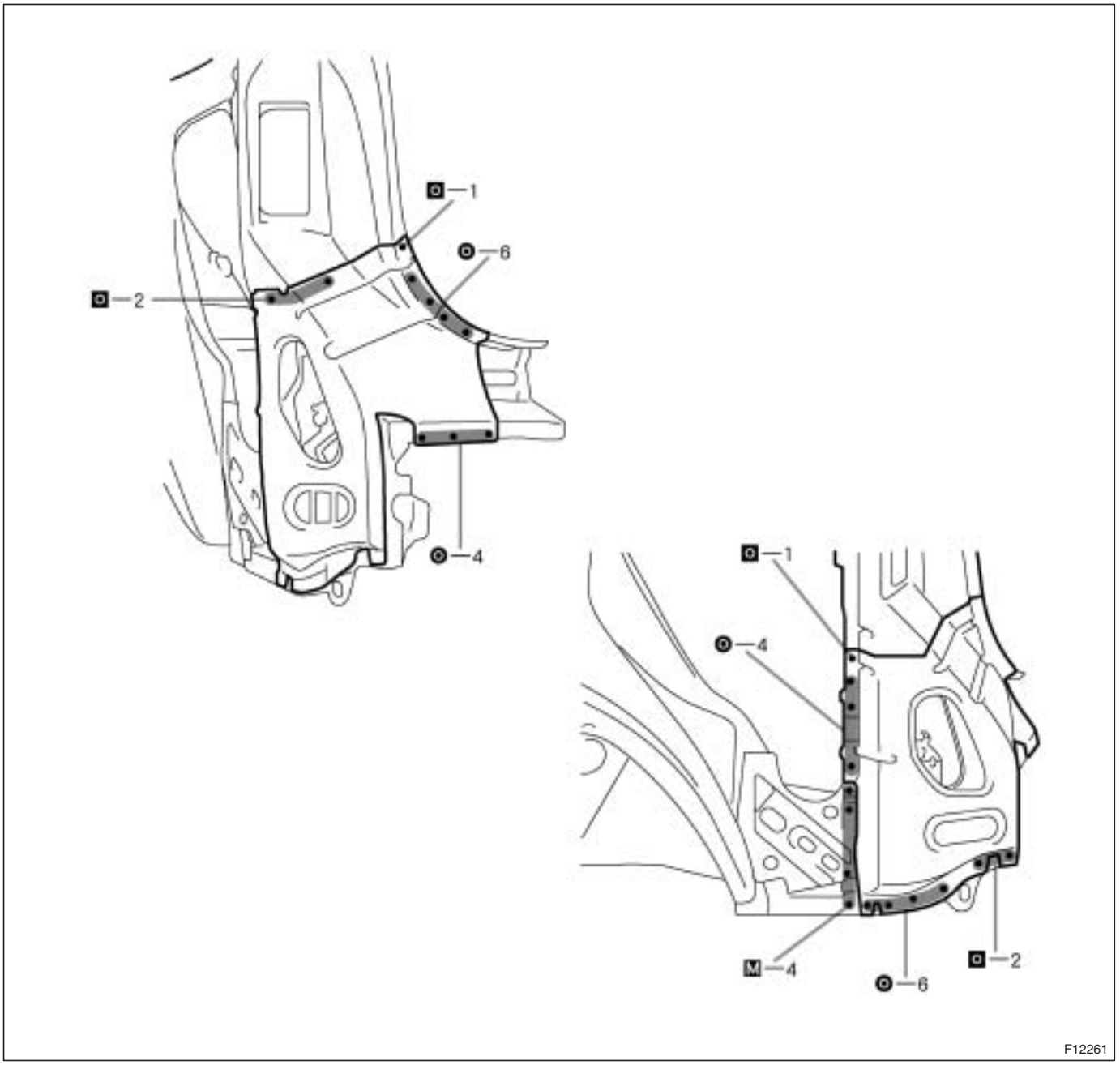

6. MEASURING OPENING PORTION DIMENSIONS (See page BP-94)
7. INSTALL BACK DOOR OPENING TROUGH (See page BP-69)
8. INSTALL BODY LOWER BACK PANEL (See page BP-56)
9. INSTALL QUARTER PANEL (See page BP-47)
10. APPLYING SEALER TO THE INSIDE OF THE VEHICLE (See page PC-1)
11. APPLYING SEALER TO THE REAR LUGGAGE COMPARTMENT (See page PC-1)
12. APPLYING UNDER COATING (See page PC-6)
13. APPLYING ANTI-RUST AGENT

(a) After applying the top coat layer, apply the anti-rust agent to the inside of the necked section structural weld spots.

ROOF SIDE INNER LOWER PANEL (ASSY)

REPLACEMENT

1. REMOVE QUARTER PANEL (See page BP-47)
2. REMOVE BODY LOWER BACK PANEL (See page BP-56)
3. REMOVE BACK DOOR OPENING TROUGH (See page BP-69)
4. REMOVE BACK DOOR OPENING LOWER REINFORCEMENT (See page BP-72)
5. REMOVE ROOF SIDE INNER LOWER PANEL

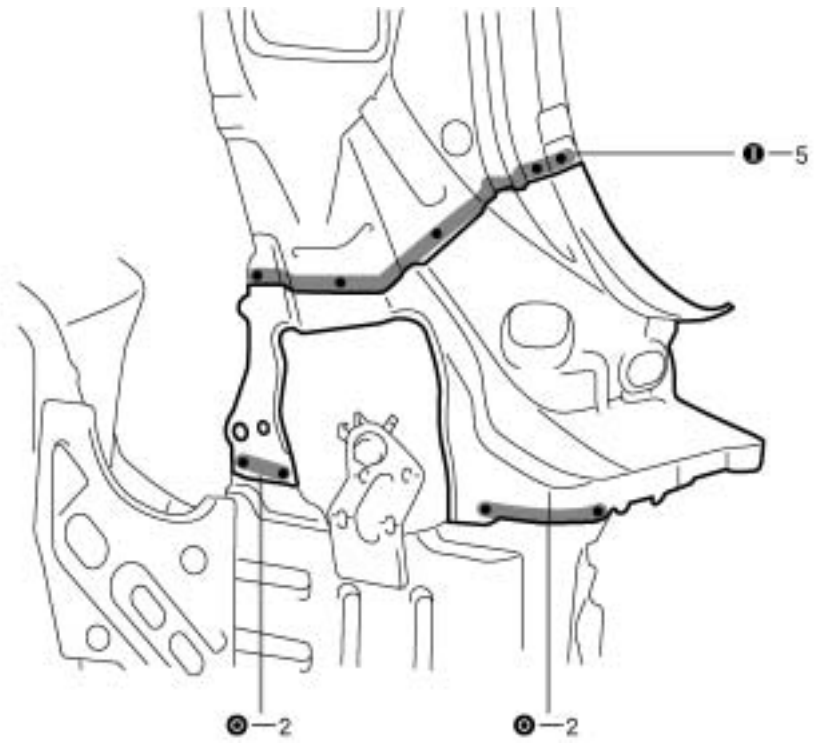

F12252

6. INSTALL ROOF SIDE INNER LOWER PANEL

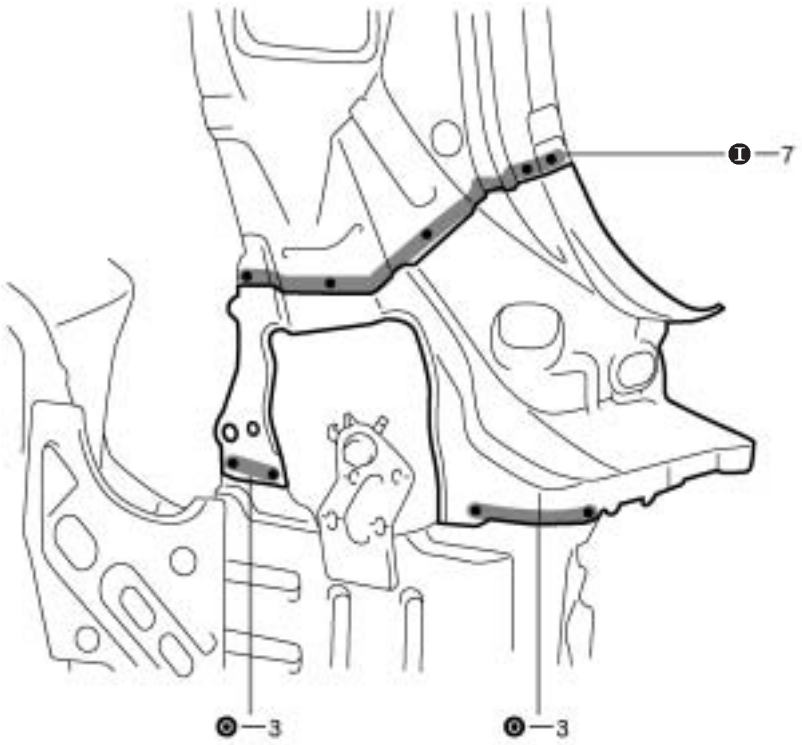

F12253

7. MEASURING OPENING PORTION DIMENSIONS (See page BP-94)
8. INSTALL BACK DOOR OPENING LOWER REINFORCEMENT (See page BP-72)
9. INSTALL BACK DOOR OPENING TROUGH (See page BP-69)
10. INSTALL BODY LOWER BACK PANEL (See page BP-56)
11. INSTALL QUARTER PANEL (See page BP-47)
12. APPLYING SEALER TO THE REAR LUGGAGE COMPARTMENT (See page PC-1)
13. APPLYING UNDER COATING (See page PC-6)
14. APPLYING ANTI-RUST AGENT

(a) After applying the top coat layer, apply the anti-rust agent to the inside of the necked section structural weld spots.

BACK DOOR OPENING SIDE REINFORCEMENT (ASSY)

REPLACEMENT

1. REMOVE QUARTER PANEL (See page BP-47)
2. REMOVE BODY LOWER BACK PANEL (See page BP-56)
3. REMOVE BACK DOOR OPENING TROUGH (See page BP-69)
4. REMOVE BACK DOOR OPENING LOWER REINFORCEMENT (See page BP-72)
5. REMOVE BACK DOOR OPENING SIDE REINFORCEMENT

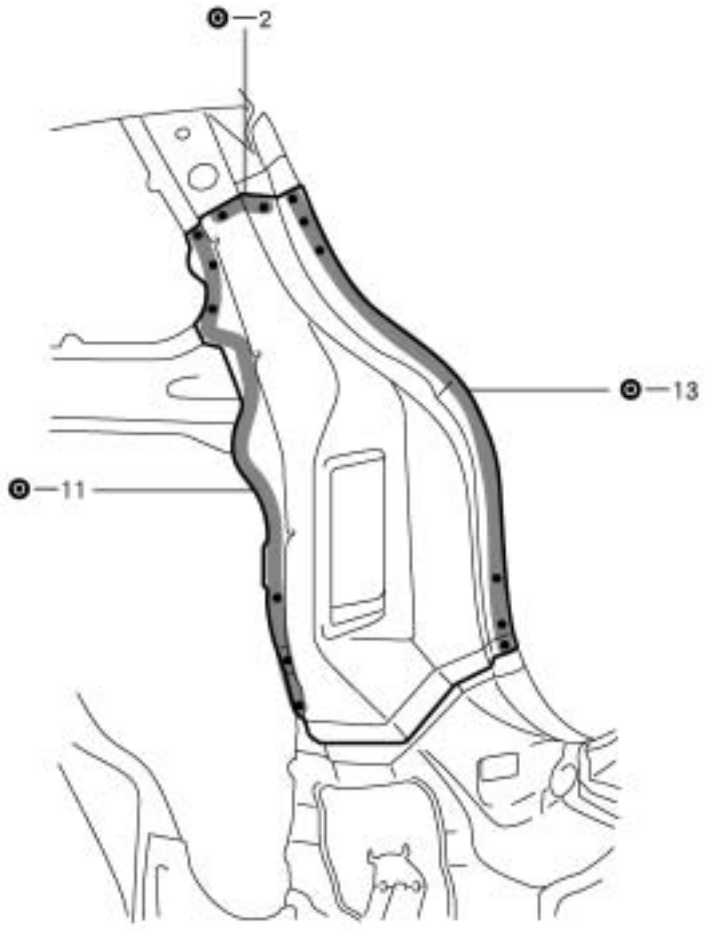

F12262

6. INSTALL BACK DOOR OPENING SIDE REINFORCEMENT

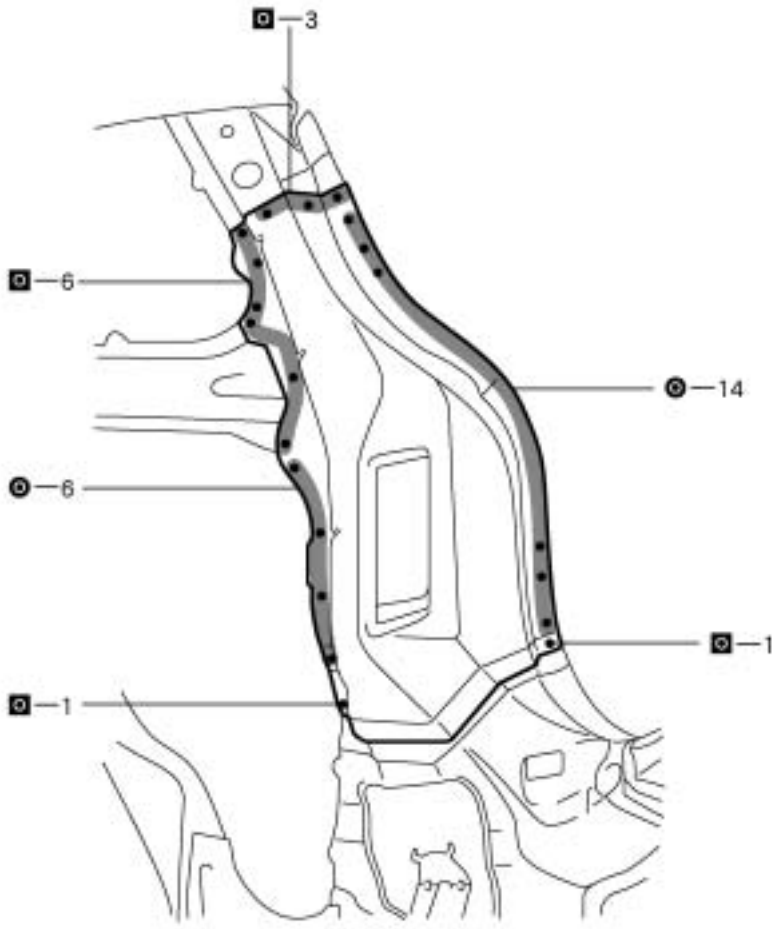

F12263

7. **MEASURING OPENING PORTION DIMENSIONS** (**See page BP-94**)
8. **INSTALL BACK DOOR OPENING LOWER REINFORCEMENT** (**See page BP-72**)
9. **INSTALL BACK DOOR OPENING TROUGH** (**See page BP-69**)
10. **INSTALL BODY LOWER BACK PANEL** (**See page BP-56**)
11. **INSTALL QUARTER PANEL**
12. **APPLYING SEALER TO THE INSIDE OF THE VEHICLE** (**See page PC-1**)
13. **APPLYING SEALER TO THE REAR LUGGAGE COMPARTMENT** (**See page PC-1**)
14. **APPLYING ANTI-RUST AGENT**

(a) After applying the top coat layer, apply the anti-rust agent to the inside of the necked section structural weld spots.

ROOF SIDE INNER REAR PANEL (ASSY)

REPLACEMENT

1. REMOVE QUARTER PANEL (See page BP-47)
2. REMOVE BODY LOWER BACK PANEL (See page BP-56)
3. REMOVE BACK DOOR OPENING TROUGH (See page BP-69)
4. REMOVE BACK DOOR OPENING LOWER REINFORCEMENT (See page BP-72)
5. REMOVE ROOF SIDE INNER LOWER PANEL (See page BP-74)
6. REMOVE BACK DOOR OPENING SIDE REINFORCEMENT (See page BP-76)
7. REMOVE ROOF SIDE INNER REAR PANEL

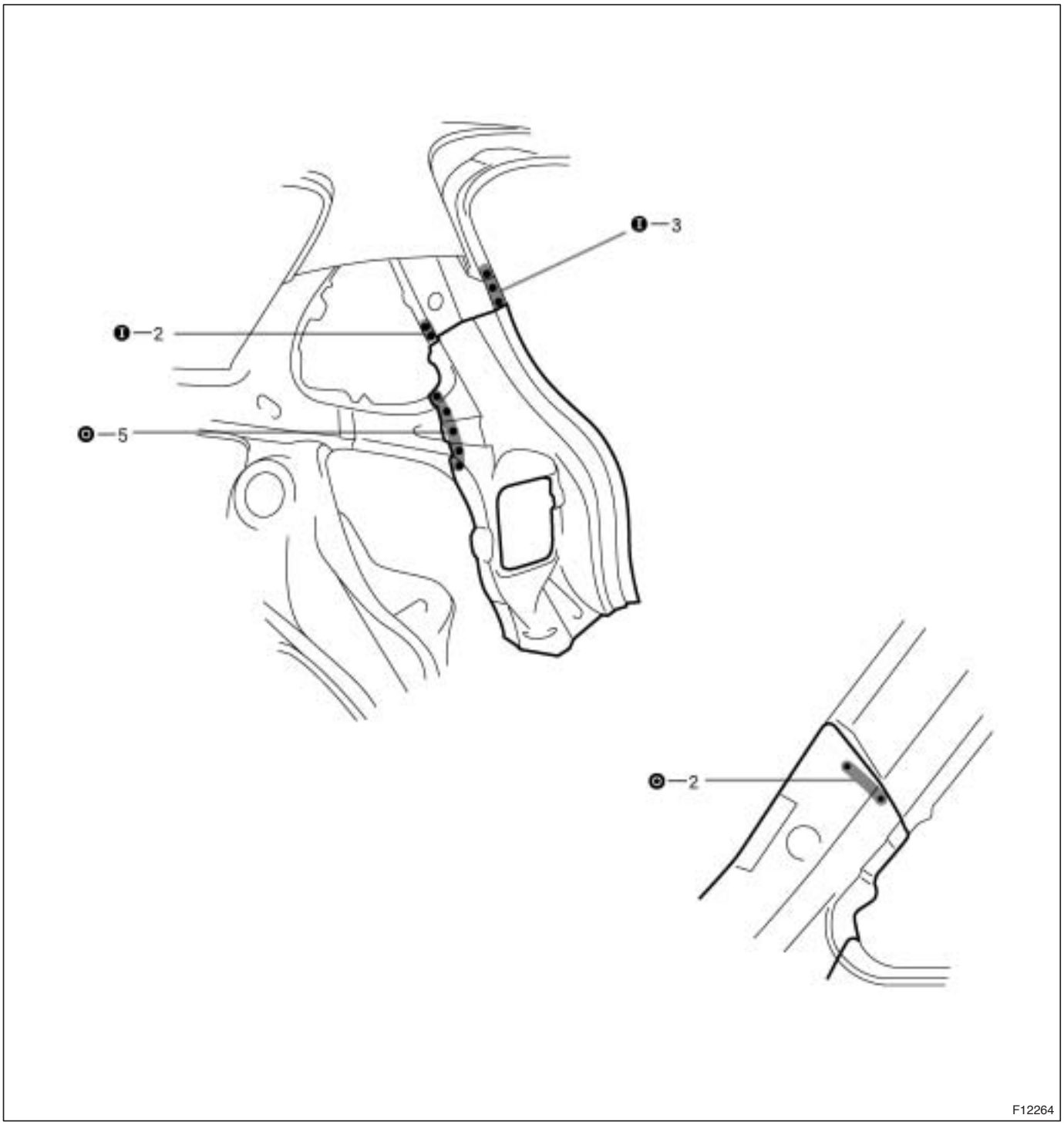

8. INSTALL ROOF SIDE INNER REAR PANEL

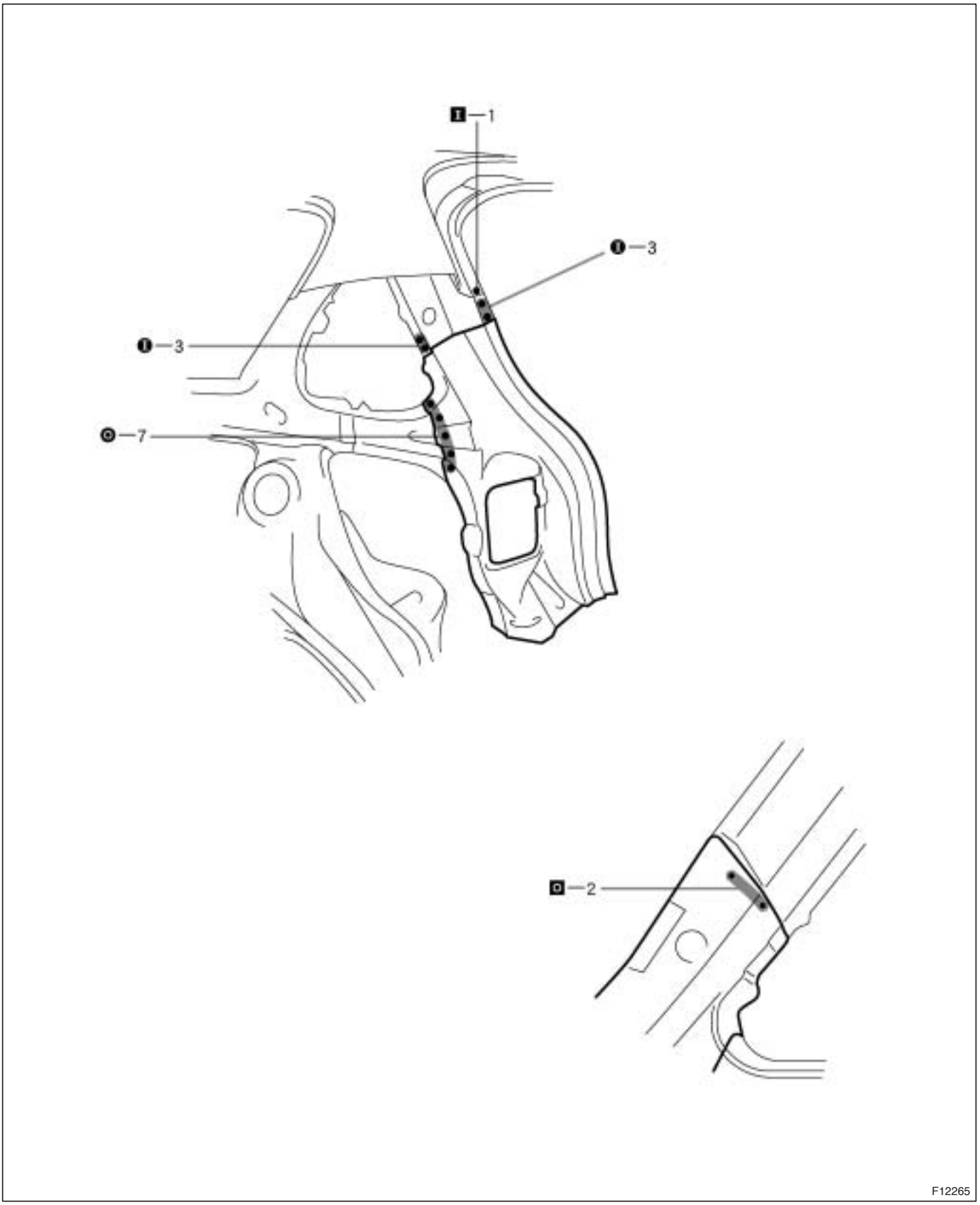

9. **INSTALL BACK DOOR OPENING SIDE REINFORCEMENT (See page BP-76)**
10. **INSTALL ROOF SIDE INNER LOWER PANEL (See page BP-74)**
11. **INSTALL BACK DOOR OPENING LOWER REINFORCEMENT (See page BP-72)**
12. **INSTALL BACK DOOR OPENING TROUGH (See page PB-69)**
13. **INSTALL BODY LOWER BACK PANEL (See page BP-56)**
14. **INSTALL QUARTER PANEL (See page BP-47)**
15. **APPLYING SEALER TO THE INSIDE OF THE VEHICLE (See page PC-1)**
16. **APPLYING SEALER TO THE REAR LUGGAGE COMPARTMENT (See page PC-1)**
17. **APPLYING ANTI-RUST AGENT**

(a) After applying the top coat layer, apply the anti-rust agent to the inside of the necked section structural weld spots.

REAR FLOOR REAR SIDE MEMBER (ASSY)

REPLACEMENT

1. **REMOVE QUARTER PANEL (See page BP-47)**
2. **REMOVE BACK DOOR OPENING TROUGH (See page BP-69)**
3. **REMOVE BODY LOWER BACK PANEL (See page BP-56)**
4. **REMOVE BACK DOOR OPENING LOWER REINFORCEMENT (See page BP-72)**
5. **REMOVE REAR FLOOR PAN (See page BP-58)**
6. **REMOVE JACK UP BRACKET**
7. **REMOVE REAR FLOOR NO.4 CROSSMEMBER (See page BP-64)**
8. **REMOVE REAR FLOOR REAR SIDE MEMBER**

(a) Remove the rear floor side member reinforcement at the same time.

(b) Make an incision in the center floor pan and bend it upward as shown. Drill out the spot welds and separate the floor side inner member.

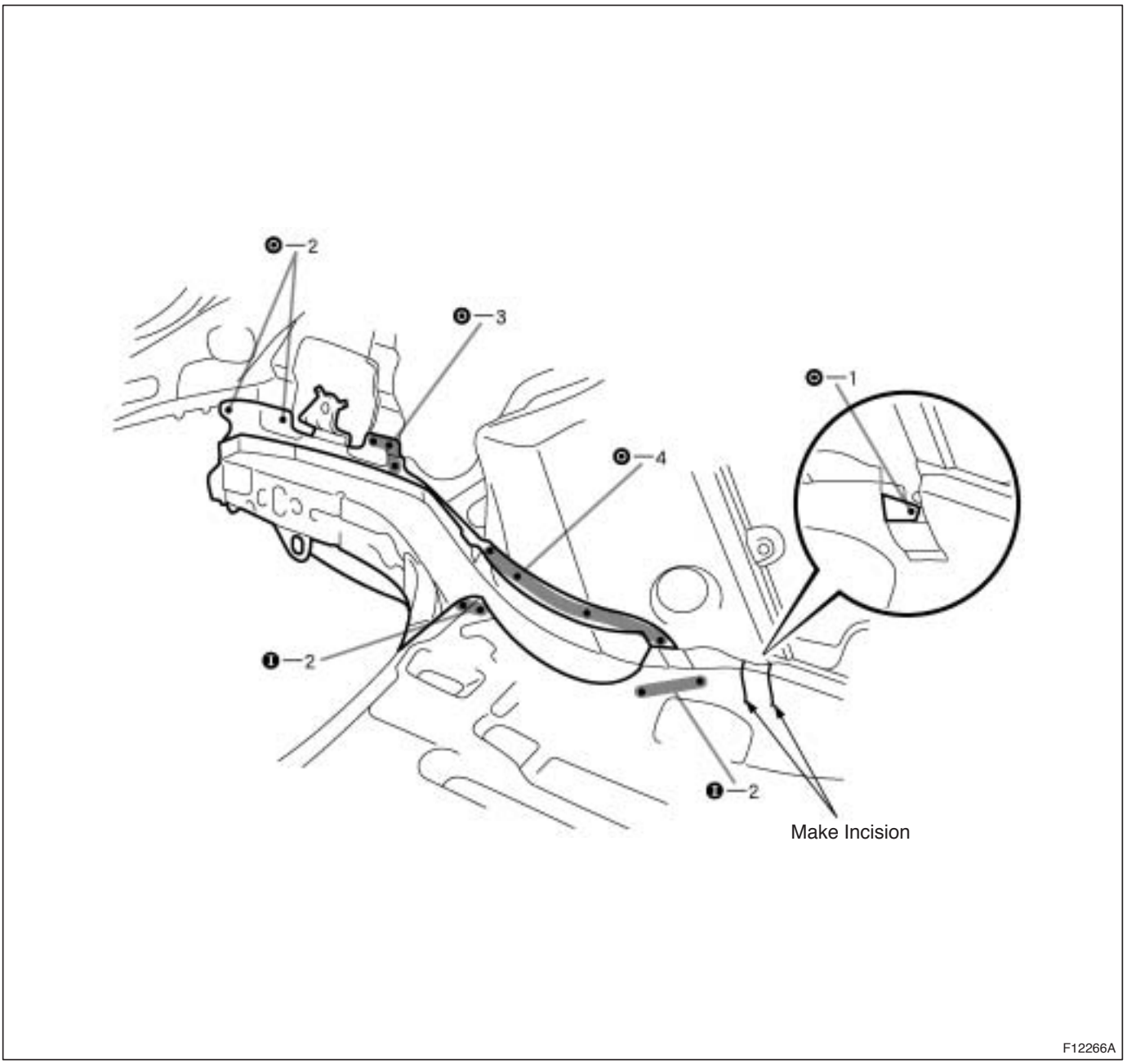

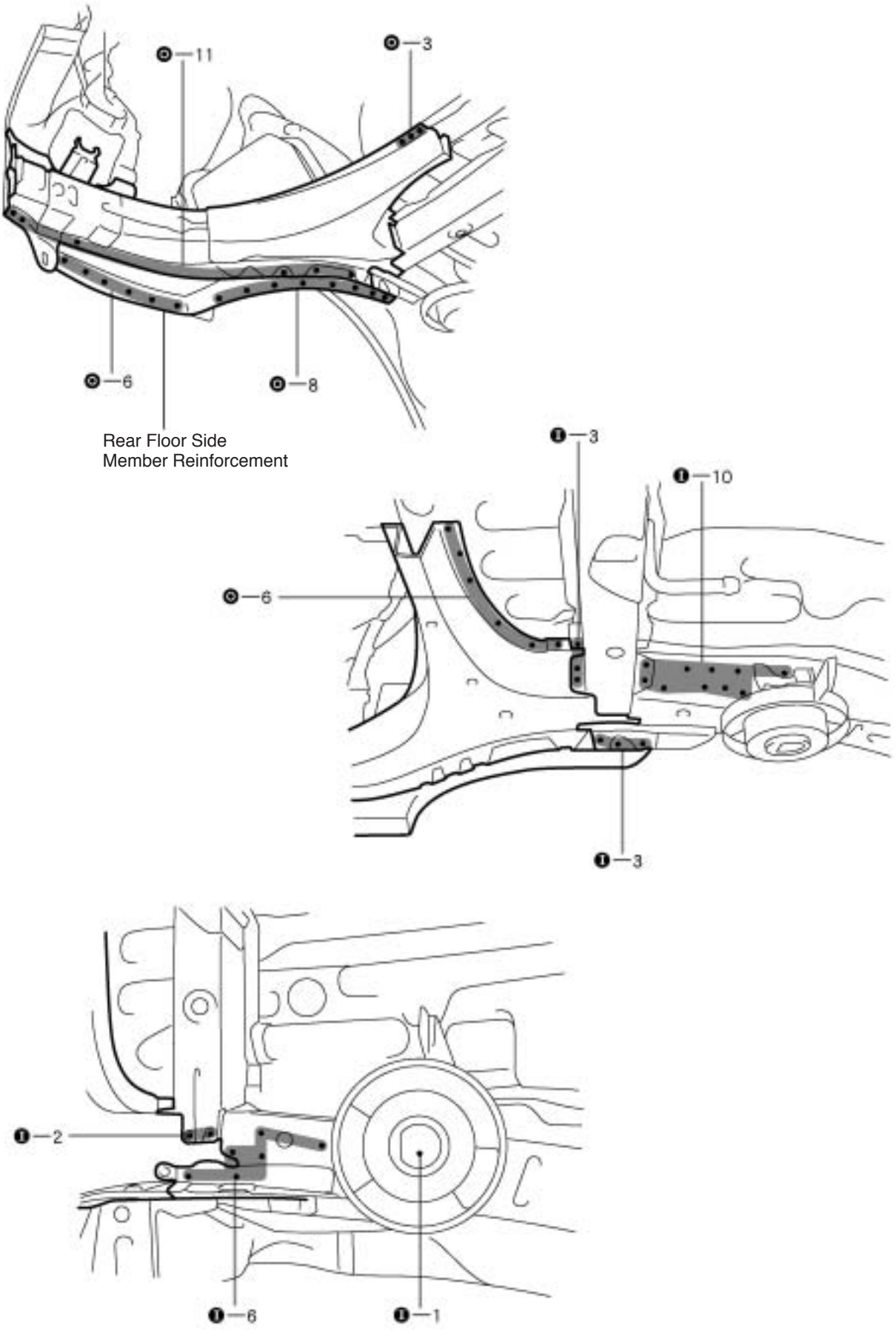
11
3
6
8
Rear Floor Side
Member Reinforcement
3
10
6
3
2
6
1
F12267A

9. INSTALL REAR FLOOR REAR SIDE MEMBER

(a) Temporarily install the new parts and measure each part in accordance with the body dimension diagram.

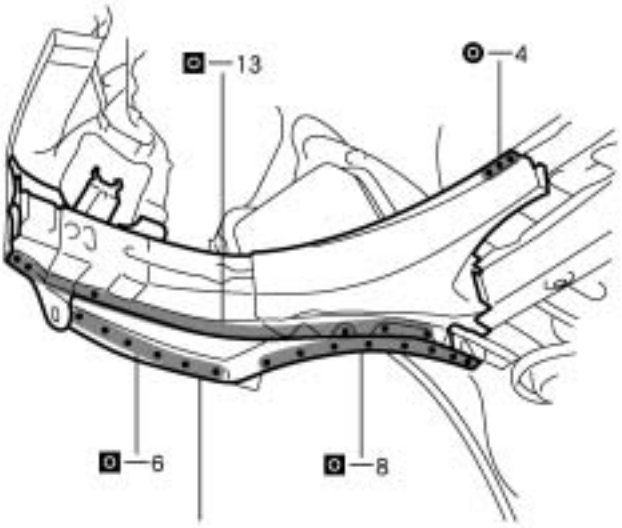

Rear Floor Side Member Reinforcement

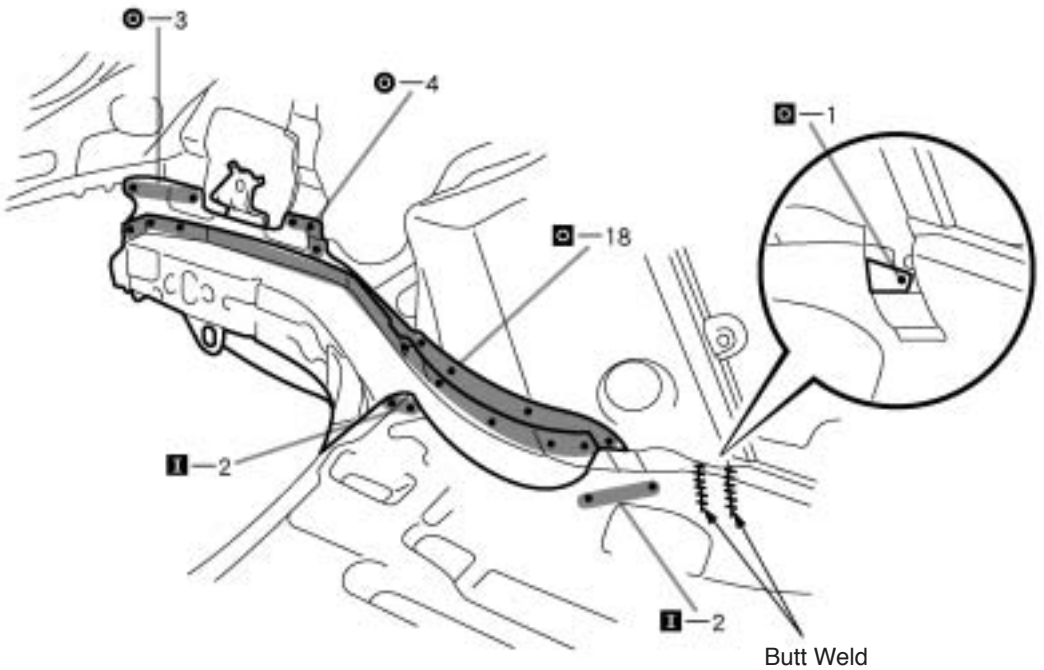

Butt Weld

F12268A

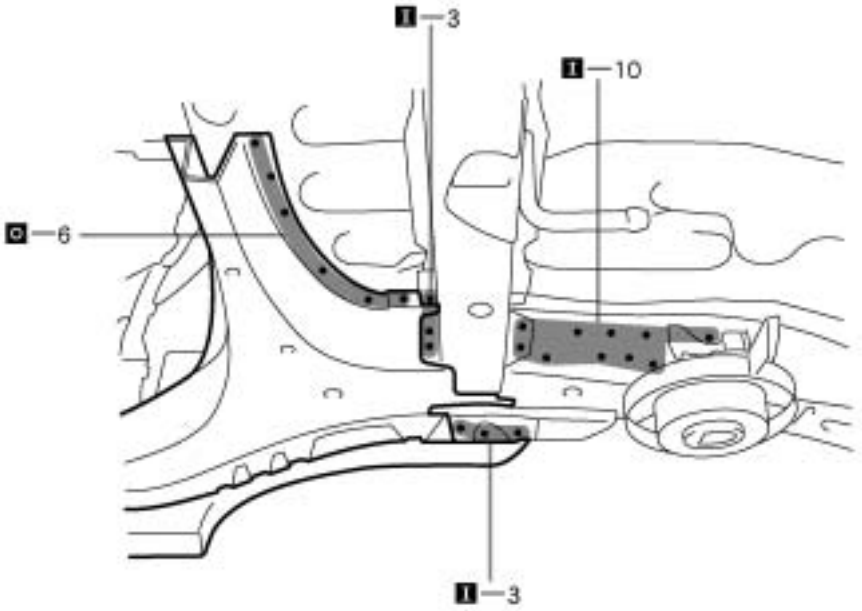

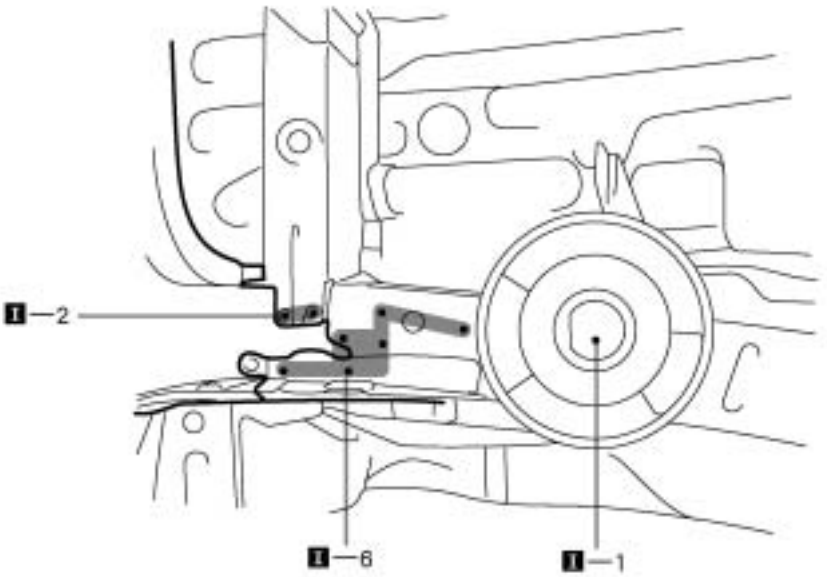

F12269

10. **MEASURING THE UNDER BODY DIMENSIONS** (**See page BP-94**)
11. **INSTALL REAR FLOOR NO.4 CROSSMEMBER** (**See page BP-64**)
12. **INSTALL JACK UP BRACKET** (**See page BP-61**)
13. **INSTALL REAR FLOOR PAN** (**See page BP-58**)
14. **INSTALL BODY LOWER BACK PANEL** (**See page BP-56**)
15. **INSTALL BACK DOOR OPENING LOWER REINFORCEMENT** (**See page BP-72**)
16. **INSTALL BACK DOOR OPENING TROUGH** (**See page BP-69**)
17. **INSTALL QUARTER PANEL** (**See page BP-47**)
18. **APPLYING SEALER TO THE INSIDE OF THE VEHICLE** (**See page PC-1**)
19. **APPLYING SEALER TO THE REAR LUGGAGE COMPARTMENT** (**See page PC-1**)
20. **APPLYING UNDER COATING** (**See page PC-6**)
21. **REPLACEMENT SILENCER SHEET** (**See page PC-9**)
22. **APPLYING ANTI-RUST AGENT**

(a) After applying the top coat layer, apply the anti-rust agent to the inside of the necked section structural weld spots.

ROOF PANEL (ASSY)

REPLACEMENT

1. REMOVE ROOF PANEL

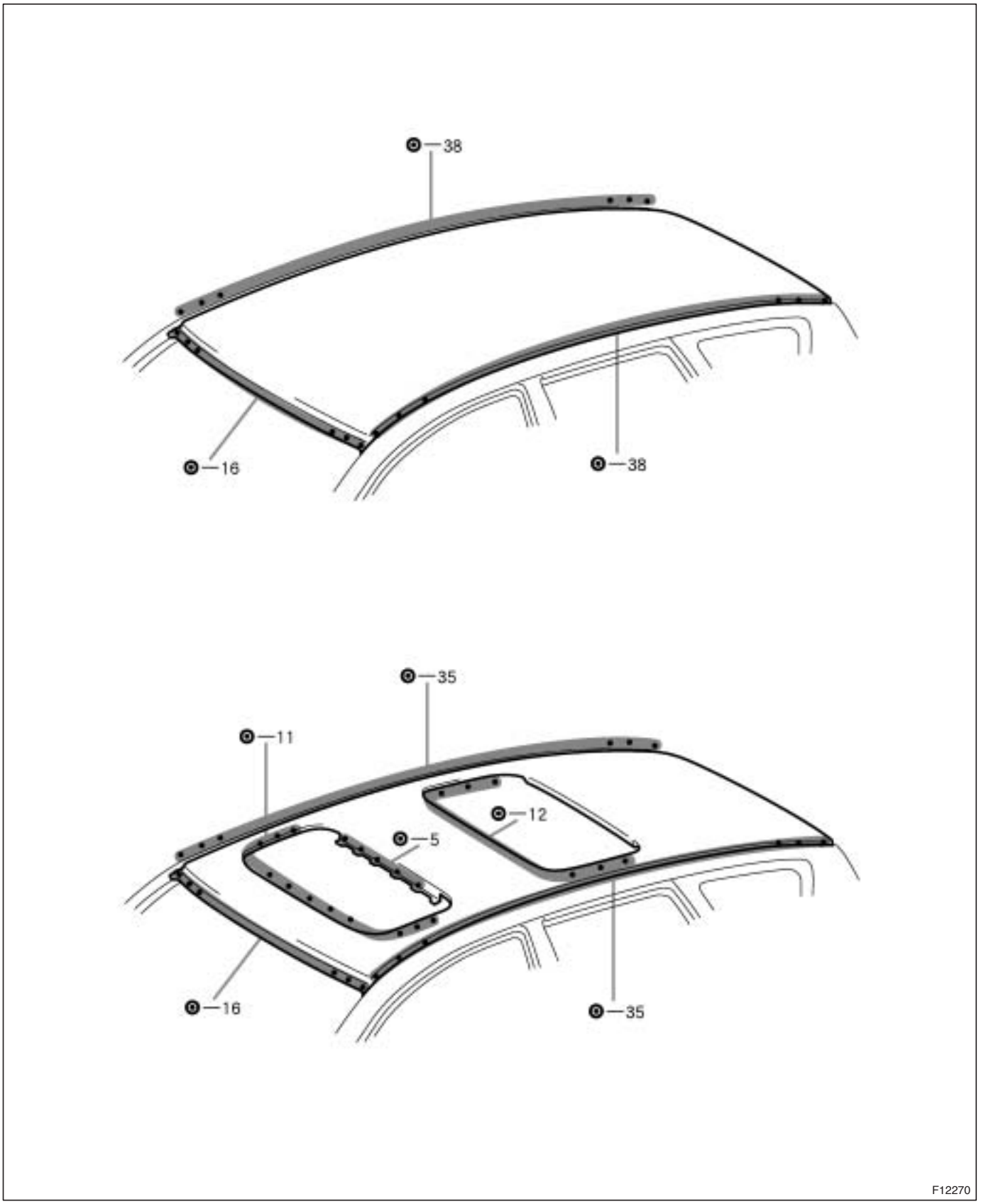

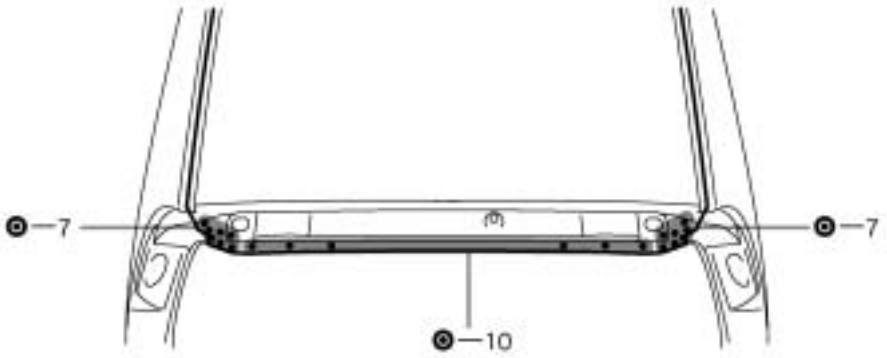

[If reusing the roof panel reinforcement]

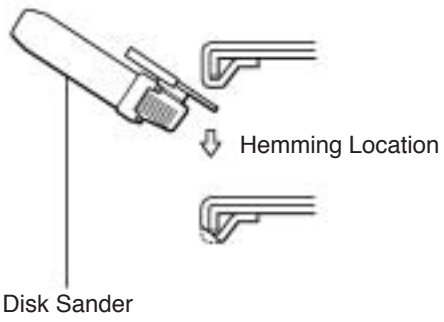

F12271A

2. INSTALL ROOF PANEL: w/o Moon Roof

(a) Before temporarily installing the new parts, apply body sealer to the windshield header panel, roof panel reinforcement and back door opening frame.

HINT:
Apply just enough sealer for the new parts to make contact.

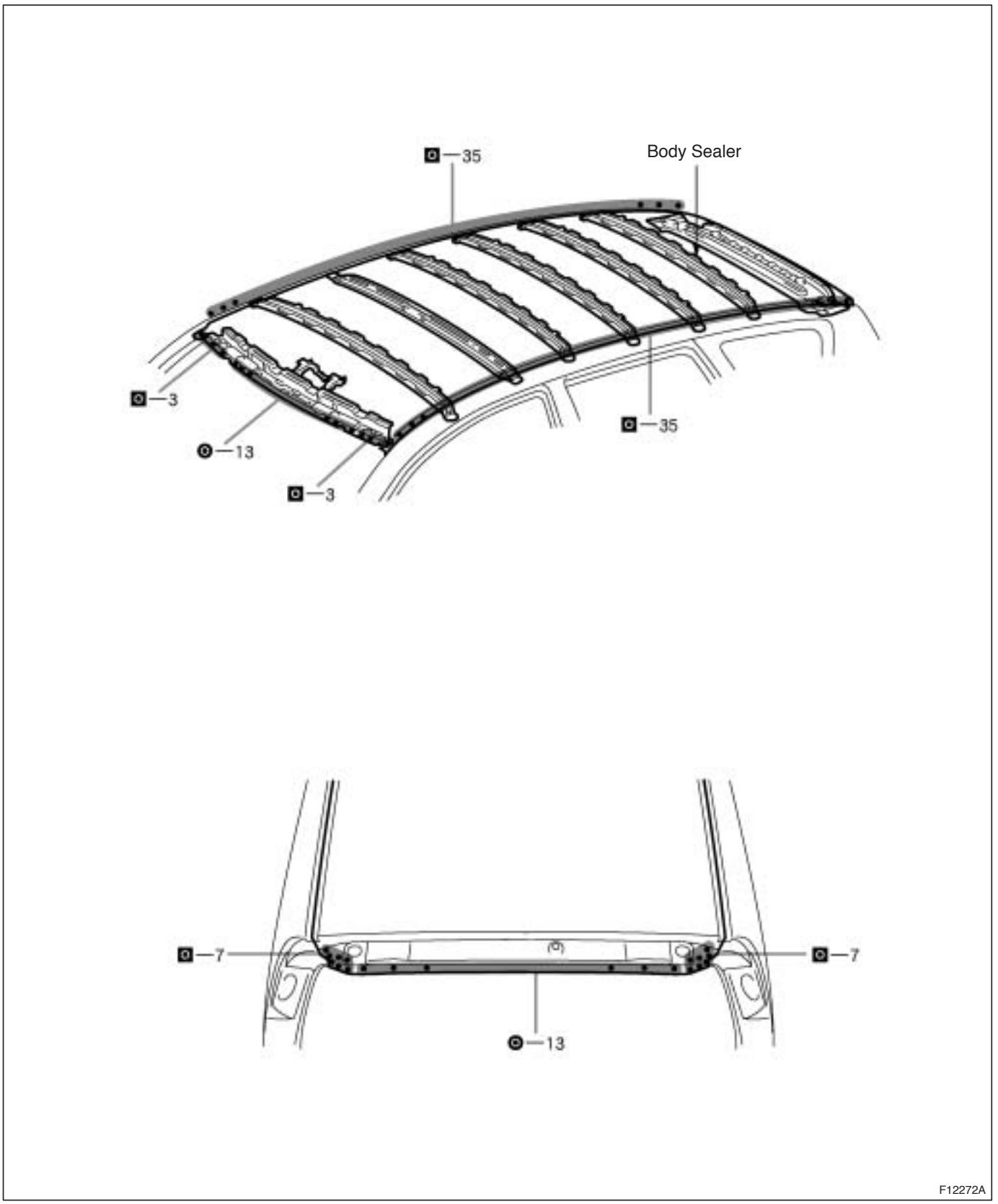

3. INSTALL ROOF PANEL: w/ Moon Roof

(a) Before temporarily installing the new parts, apply body sealer to the windshield header panel, roof panel reinforcement and back door opening frame.

HINT:
Apply just enough sealer for the new parts to make contact.

(b) Bend the flange hem with a wooden hammer and dolly.

HINT:
Perform hemming three steps, being careful not to warp the panel.

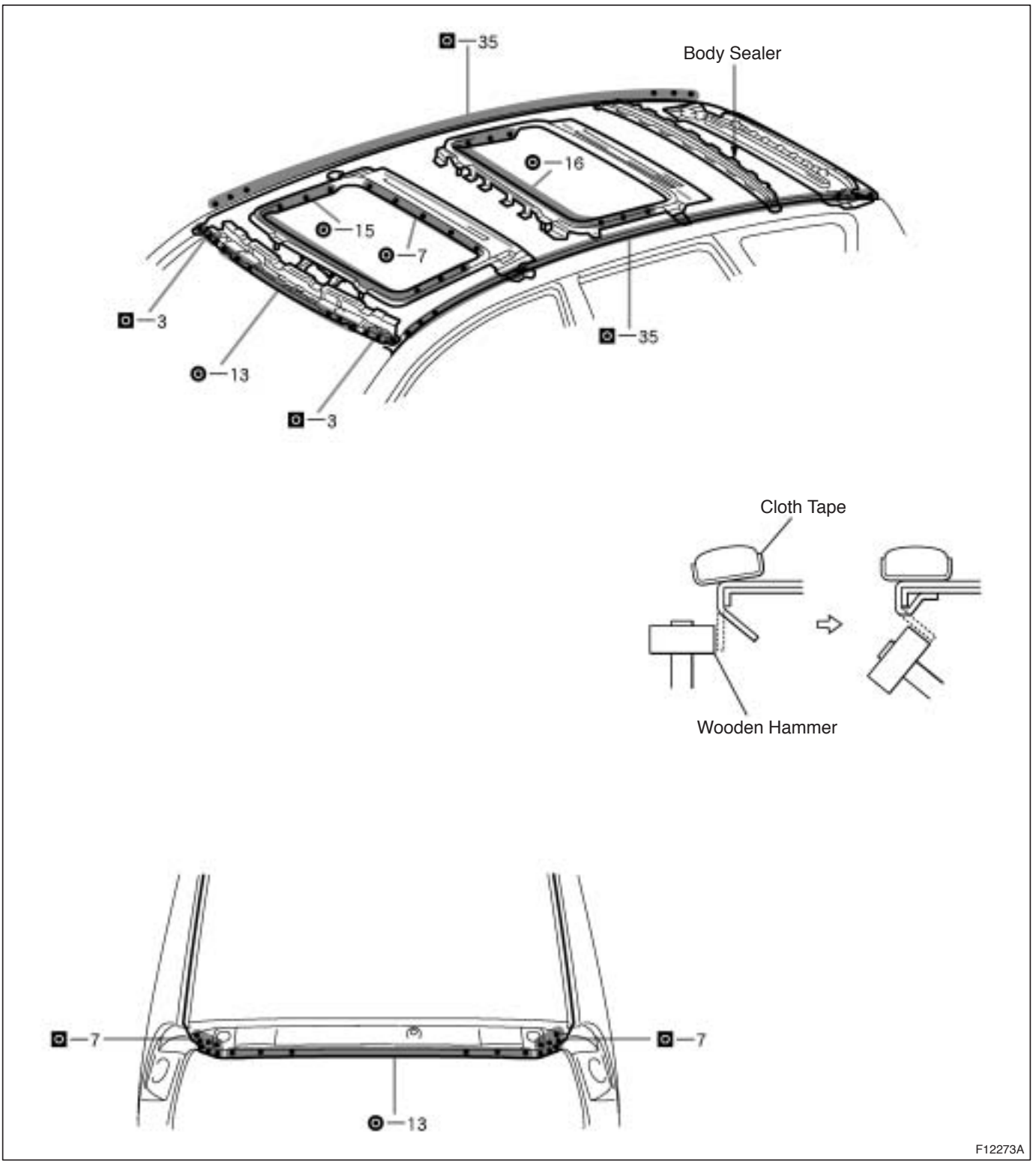

4. **MEASURING OPENING PORTION DIMENSIONS (See page BP-94)**
5. **APPLYING SEALER TO THE INSIDE OF THE VEHICLE (See page PC-1)**
6. **APPLYING SEALER TO THE REAR LUGGAGE COMPARTMENT (See page PC-1)**
7. **CHARGING THE POLYURETHANE FOAM (See page PC-8)**
8. **APPLYING ANTI-RUST AGENT**

(a) After applying the top coat layer, apply the anti-rust agent to the inside of the necked section structural weld spots.

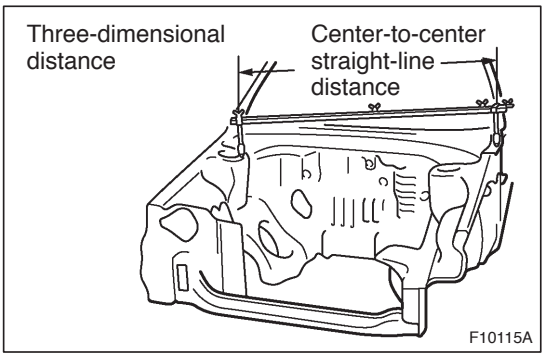

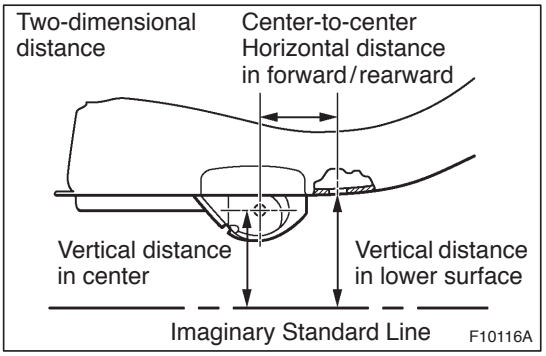

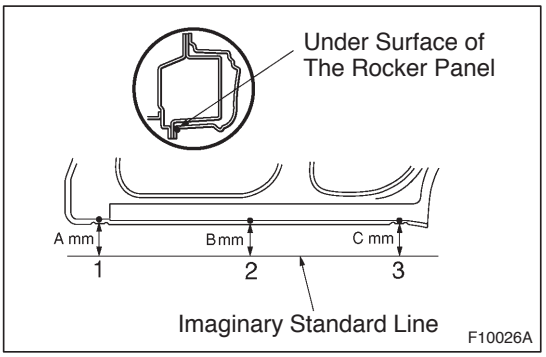

GENERAL INFORMATION

1. BASIC DIMENSIONS

(a) There are two types of dimensions in the diagram.

(1) (Three-dimensional distance)

- Straight-line distance between the centers of two measuring points.

(2) (Two-dimensional distance)

- Horizontal distance in forward/rearward between the centers of two measuring points.
- The height from an imaginary standard line.

(b) In cases in which only one dimension is given, left and right are symmetrical.

(c) The dimensions in the following drawing indicate actual distance. Therefore, please use the dimensions as a reference.

(d) The line that connects the places listed below is the imaginary standard line when measuring the height. (The dimensions are printed in the text.)

SYMBOL	Name
1	The place that was lowered A mm from the under surface of the rocker panel centered on the front jack up point.
2	The place that was lowered B mm from the under surface of the rocker panel centered between 1 and 3.
3	The place that was lowered C mm from the under surface of the rocker panel centered on the rear jack up point.

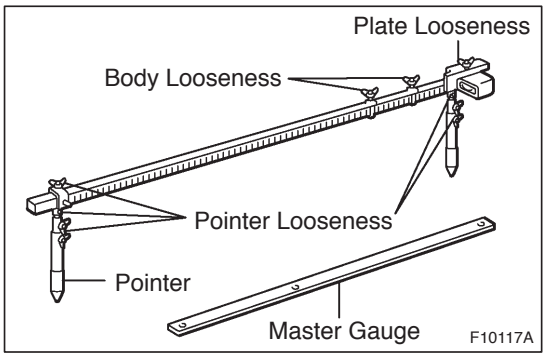

2. MEASURING

(a) Basically, all measurements are to be done with a tracking gauge. For portions where it is not possible to use a tracking gauge, a tape measure should be used.

(b) Use only a tracking gauge that has no looseness in the body, measuring plate, or pointers.

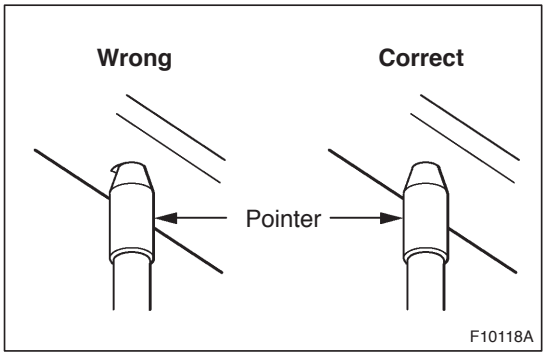

HINT:

1. The height of the left and right pointers must be equal.
2. Always calibrate the tracking gauge before measuring or after adjusting the pointer height.
3. Take care not to drop the tracking gauge or otherwise shock it.
4. Confirm that the pointers are securely in the holes.

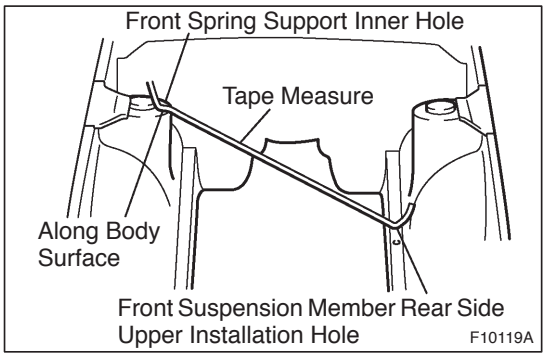

(c) When using a tape measure, avoid twists and bends in the tape.

(d) When tracking a diagonal measurement from the front spring support inner hole to the suspension member upper rear installation hole, measure along the front spring support panel surface.

BODY DIMENSION DRAWINGS

ENGINE COMPARTMENT

(Three-Dimensional Distance)

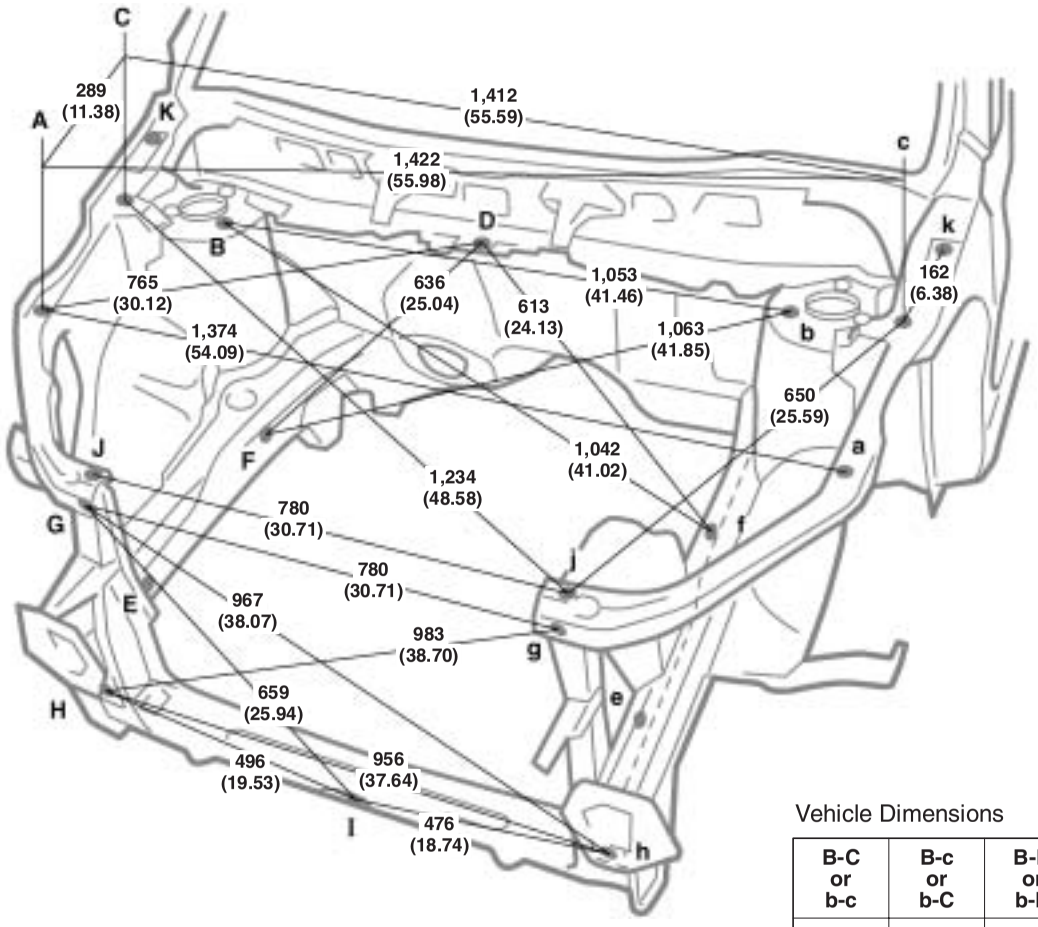

Vehicle Dimensions

B-C or b-c	B-c or b-C	B-D or b-D	D-E	D-e
192 (7.56)	1,234 (48.58)	528 (20.79)	840 (33.07)	824 (32.44)

HINT: For symbols, capital letters indicate right side of vehicle, small letters indicate left side of vehicle (Seen from rear).

mm (in.)

Symbol	Name	Hole dia.	Symbol	Name	Hole dia.
A, a	Front fender installation nut	6 (0.24) nut	f	Engine mounting installation nut	10 (0.39) nut
B, b	Front spring support hole-inner	11 (0.43)	G, g	Radiator support installation nut	6 (0.24) nut
C, c	Front fender installation nut	6 (0.24) nut	H, h	Front crossmember side reinforcement standard hole	10 (0.39)
D	Cowl top panel installation nut	6 (0.24) nut	I	Hood lock support installation nut	6 (0.24) nut
E, e	Front side member standard hole	18 (0.71)	J, j	Radiator support installation nut	6 (0.24) nut
F	Front side member standard hole	10 (0.39)	K, k	Hood hinge installation nut-rear	8 (0.31) nut

BODY OPENING AREAS (Side View-Front)

(Three-Dimensional Distance)

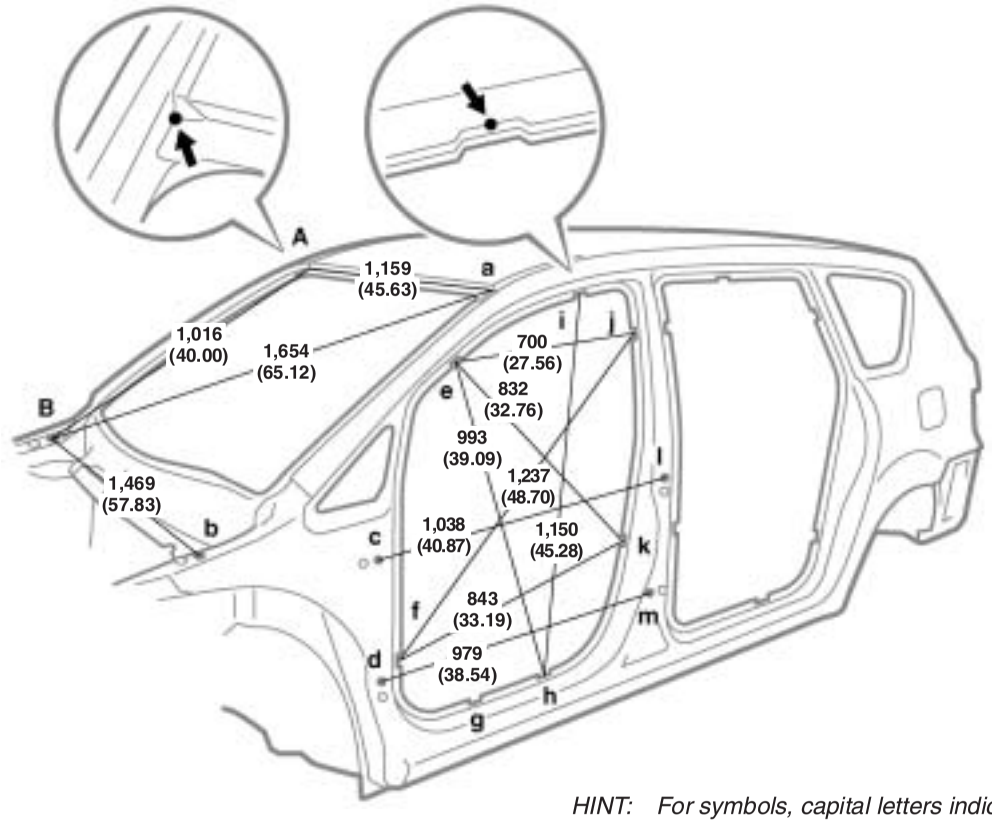

HINT: For symbols, capital letters indicate right side of vehicle, small letters indicate left side of vehicle (Seen from rear).

Vehicle Dimensions Left ↔ Right

E-e	F-f	G-g	H-h	I-i	J-j	K-k
1,285 (50.59)	1,495 (58.86)	1,520 (59.84)	1,520 (59.84)	1,162 (45.75)	1,285 (50.59)	1,484 (58.4)

E-f or e-F	E-h or e-H	E-j or e-J	F-j or f-J	F-k or f-K	H-i or h-I
1,604 (63.15)	1,714 (67.48)	1,463 (57.60)	1,857 (73.11)	1,711 67.36)	1,757 (69.17)

mm (in.)

Symbol	Name	Hole dia.	Symbol	Name	Hole dia.
A, a	Roof panel / Front body pillar adjoining portion	—	H, h	Rocker panel assembly mark	—
B, b	Hood hinge installation nut	8 (0.31) nut	I, i	Roof side rail assembly mark	—
C, c	Front door hinge installation nut	8 (0.31) nut	J, j	Center body pillar assembly mark	—
D, d	Front door hinge installation nut	8 (0.31) nut	K, k	Center body pillar assembly mark	—
E, e	Front body pillar assembly mark	—	L, l	Rear door hinge installation hole	13 (0.51)
F, f	Front body pillar assembly mark	—	M, m	Rear door hinge installation nut	8 (0.31) nut
G, g	Rocker panel assembly mark	—	—	—	—

BODY OPENING AREAS (Side View-Rear)

(Three-Dimensional Distance)

HINT: For symbols, capital letters indicate right side of vehicle, small letters indicate left side of vehicle (Seen from rear).

mm (in.)

Vehicle Dimensions Left ↔ Right

N-n	O-o	P-p	Q-q	R-r	S-s
1,316 (51.81)	1,479 (58.23)	1,519 (59.80)	1,139 (44.84)	1,271 (50.04)	1,497 (58.94)

G-p or g-P	I-q or i-Q	N-r or n-R	N-s or n-S	O-s or o-S	P-q or p-Q	R-s or r-S
1,985 (78.15)	1,326 (52.20)	1,548 (60.94)	1,789 (70.43)	1,728 (68.03)	1,751 (68.94)	1,606 (63.23)

Symbol	Name	Hole dia.	Symbol	Name	Hole dia.
G, g	Rocker panel assembly mark	—	P, p	Rocker panel assembly mark	—
I, i	Roof side rail assembly mark	—	Q, q	Roof side rail assembly mark	—
N, n	Center body pillar assembly mark	—	R, r	Quarter panel assembly mark	—
O, o	Center body pillar assembly mark	—	S, s	Quarter panel assembly mark	—

BODY OPENING AREAS (Rear View)

(Three-Dimensional Distance)

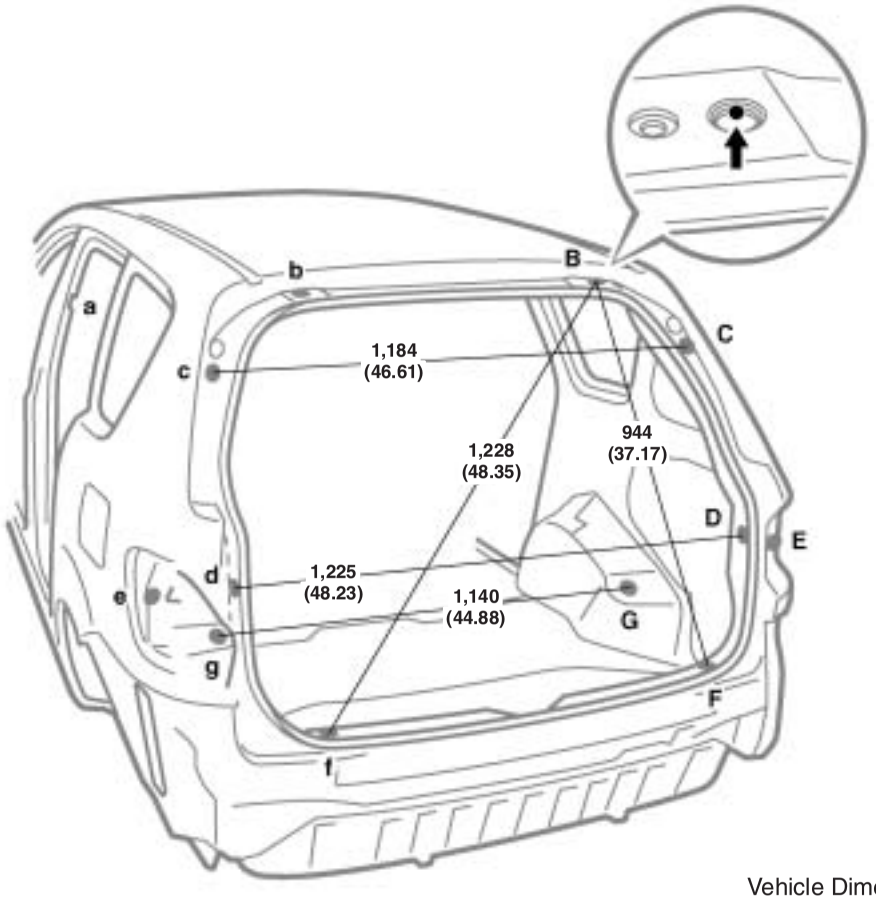

Vehicle Dimensions

A-G or a-g	A-g or a-G	E-e
1,714 (67.48)	2,107 (82.95)	1,556 (61.26)

HINT: For symbols, capital letters indicate right side of vehicle, small letters indicate left side of vehicle (Seen from rear).

mm (in.)

Symbol	Name	Hole dia.	Symbol	Name	Hole dia.
A, a	Center body pillar assembly mark	—	E, e	Quarter panel standard hole	10 (0.39)
B, b	Back door hinge installation hole	12 (0.47)	F, f	Back door scuff plate installation hole	8.5 (0.335)
C, c	Back door damper stay installation nut-lower	6 (0.24) nut	G, g	Rear shock absorber installation hole	24 (0.94)
D, d	Deck trim side panel installation hole	8.5 (0.335)	—	—	—

UNDER BODY

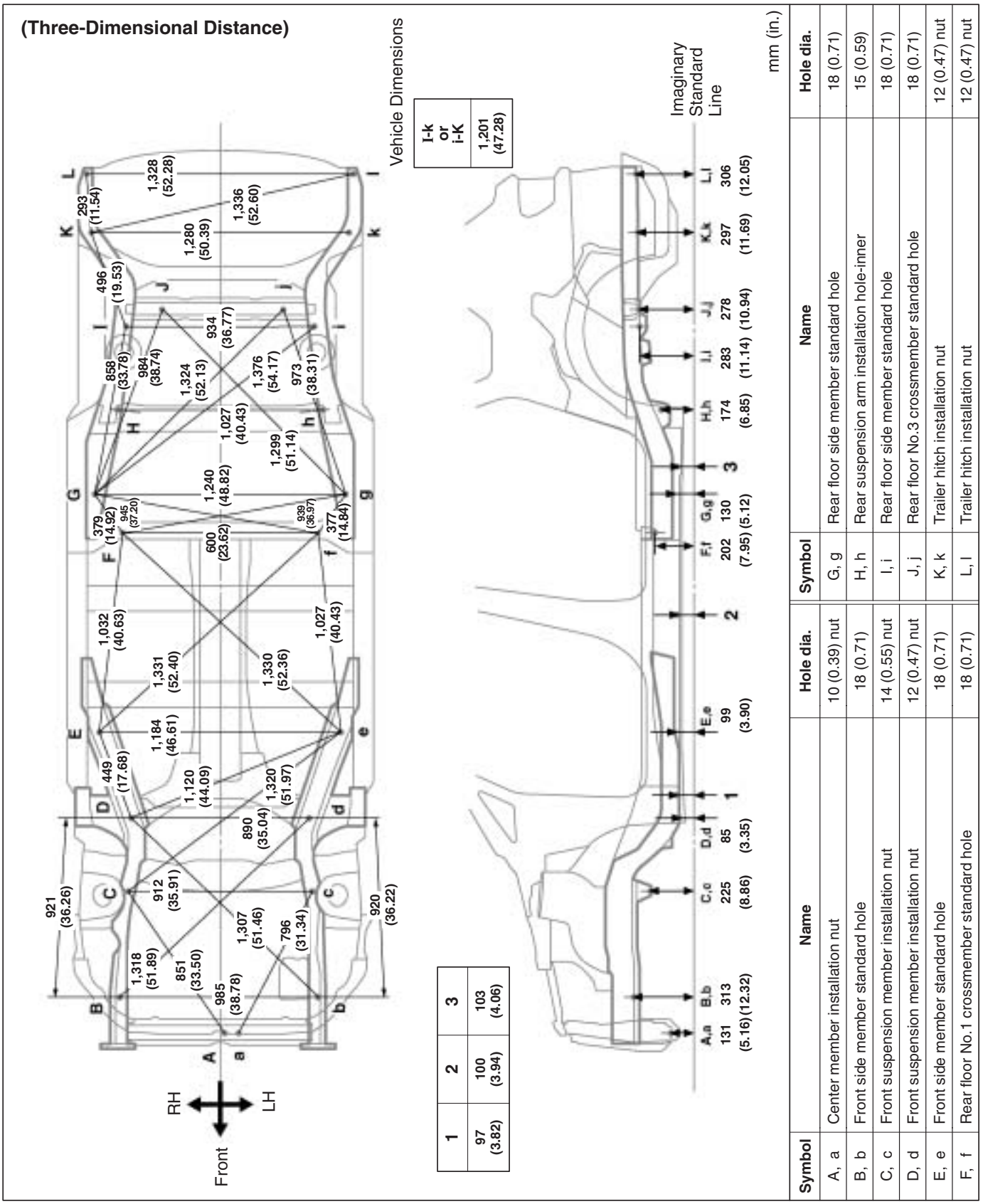

Symbol	Name	Hole dia.	Symbol	Name	Hole dia.
A, a	Center member installation nut	10 (0.39) nut	G, g	Rear floor side member standard hole	18 (0.71)
B, b	Front side member standard hole	18 (0.71)	H, h	Rear suspension arm installation hole-inner	15 (0.59)
C, c	Front suspension member installation nut	14 (0.55) nut	I, i	Rear floor side member standard hole	18 (0.71)
D, d	Front suspension member installation nut	12 (0.47) nut	J, j	Rear floor No.3 crossmember standard hole	18 (0.71)
E, e	Front side member standard hole	18 (0.71)	K, k	Trailer hitch installation nut	12 (0.47) nut
F, f	Rear floor No.1 crossmember standard hole	18 (0.71)	L, l	Trailer hitch installation nut	12 (0.47) nut

UNDER BODY (Cont'd)

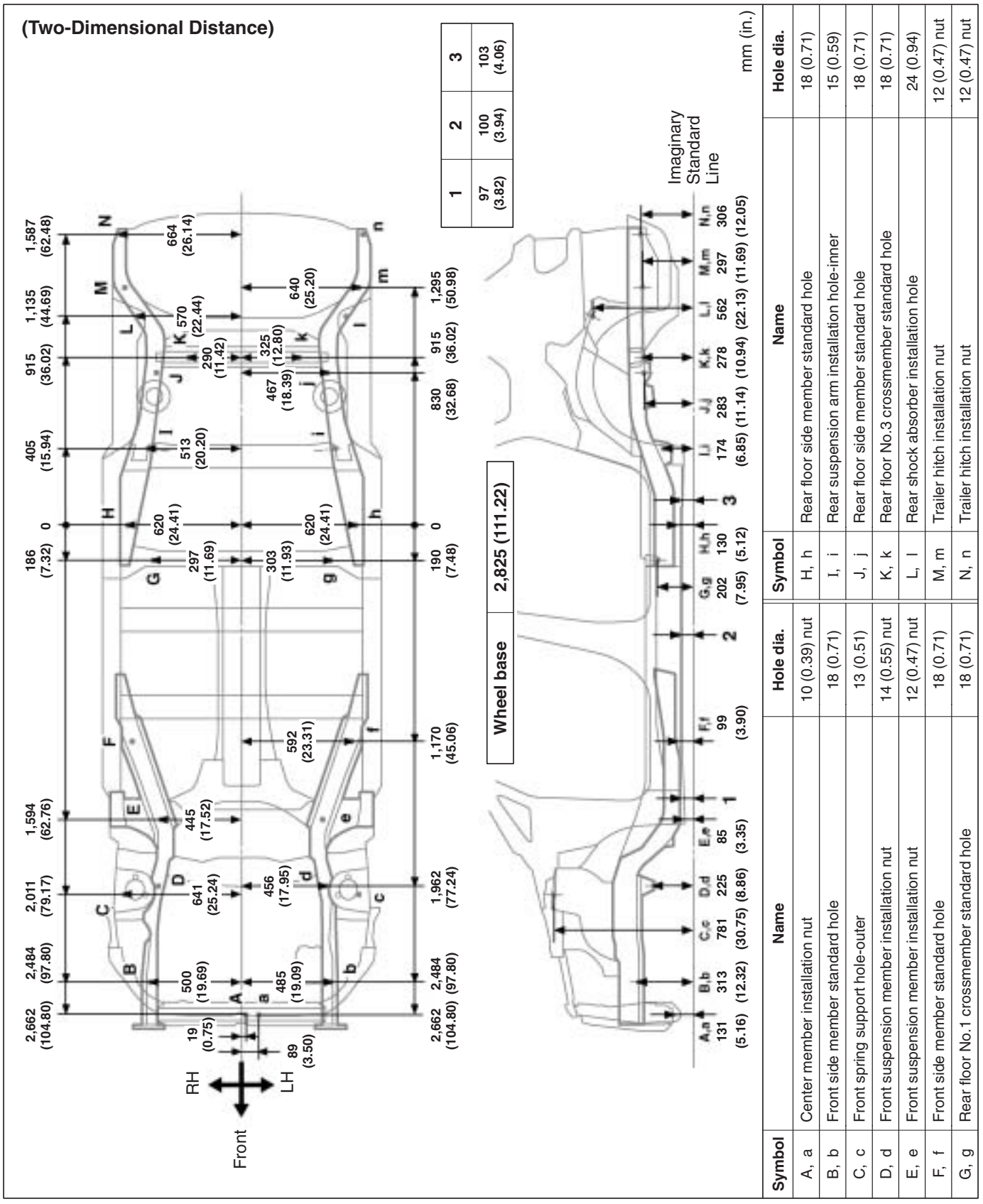

1	2	3
97 (3.82)	100 (3.94)	103 (4.06)

Symbol	Name	Hole dia.	Symbol	Name	Hole dia.
A, a	Center member installation nut	10 (0.39) nut	H, h	Rear floor side member standard hole	18 (0.71)
B, b	Front side member standard hole	18 (0.71)	I, i	Rear suspension arm installation hole-inner	15 (0.59)
C, c	Front spring support hole-outer	13 (0.51)	J, j	Rear floor side member standard hole	18 (0.71)
D, d	Front suspension member installation nut	14 (0.55) nut	K, k	Rear floor No.3 crossmember standard hole	18 (0.71)
E, e	Front suspension member installation nut	12 (0.47) nut	L, l	Rear shock absorber installation hole	24 (0.94)
F, f	Front side member standard hole	18 (0.71)	M, m	Trailer hitch installation nut	12 (0.47) nut
G, g	Rear floor No.1 crossmember standard hole	18 (0.71)	N, n	Trailer hitch installation nut	12 (0.47) nut

BODY PANEL SEALING AREAS

HINT:

1. Prior to applying body sealer, clean the area with a rag soaked in a grease, wax and silicone remover.
2. If weld-through primer was used, first wipe off any excess and coat with anti-corrosion primer before applying body sealer.
3. Wipe off excess body sealer with a rag soaked in a grease, wax and silicone remover.
4. If body sealer is damaged by peeling, cracks, etc., be sure to repair as necessary.

1. ENGINE COMPARTMENT

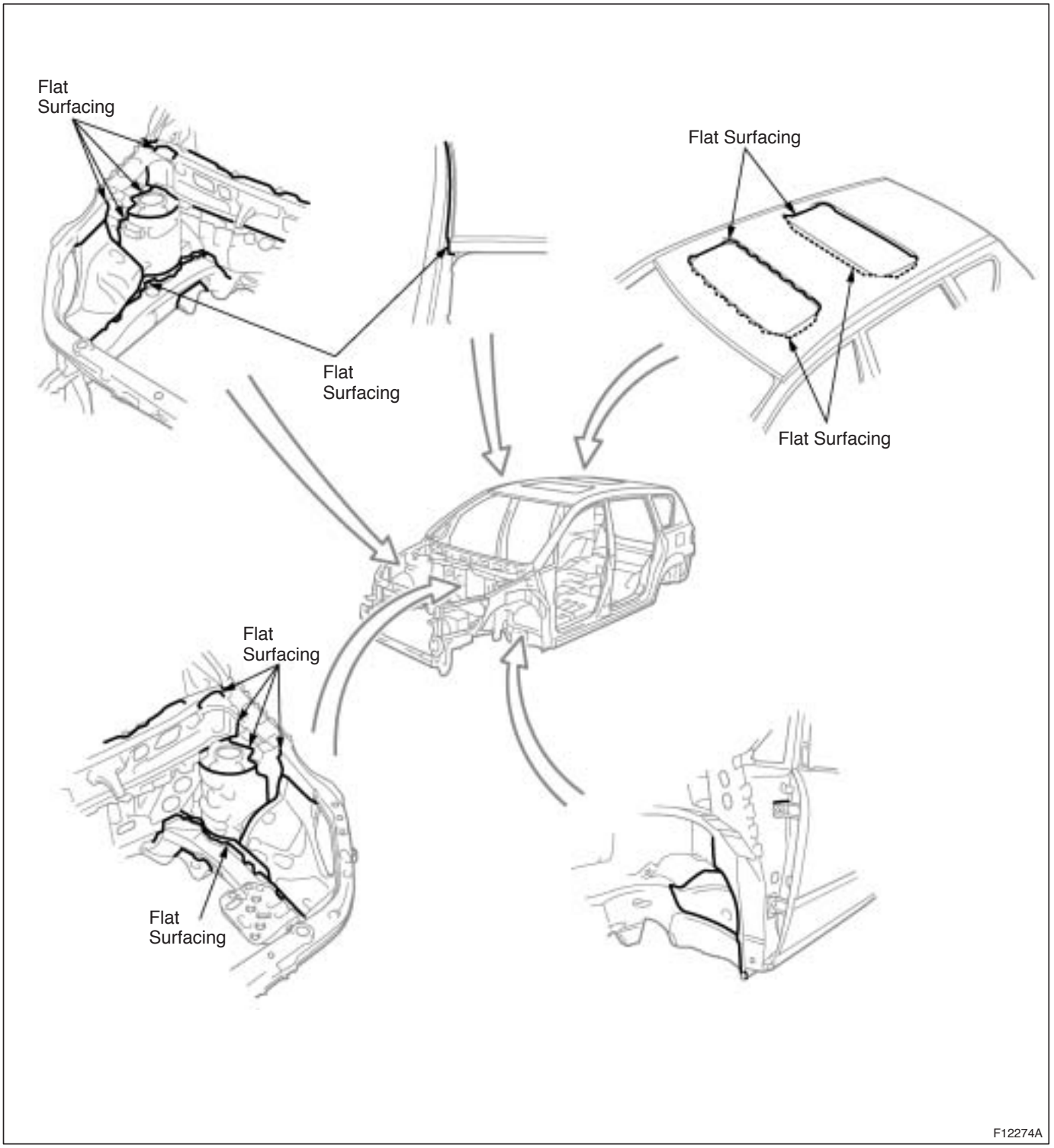

2. INSIDE

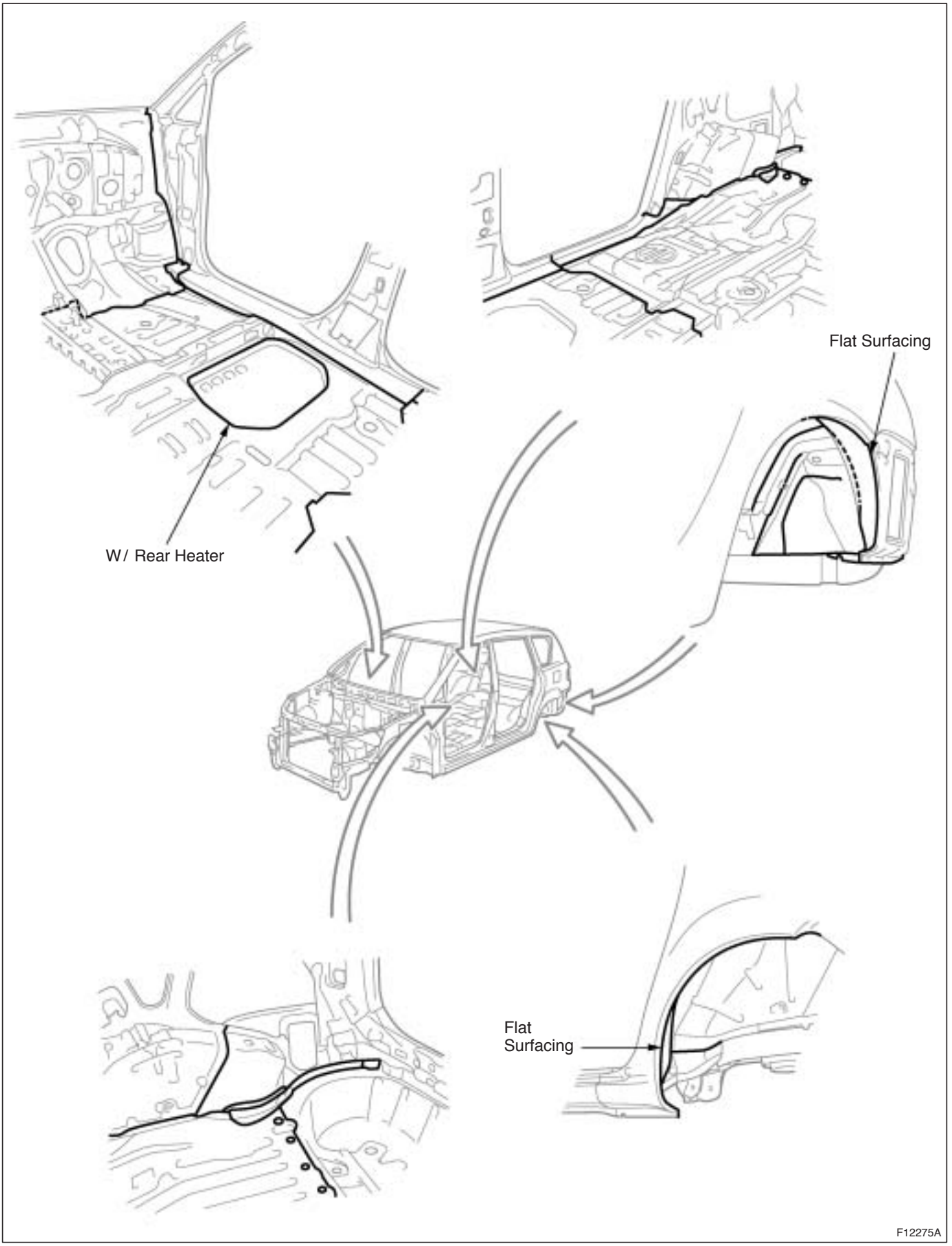

3. REAR LUGGAGE COMPARTMENT

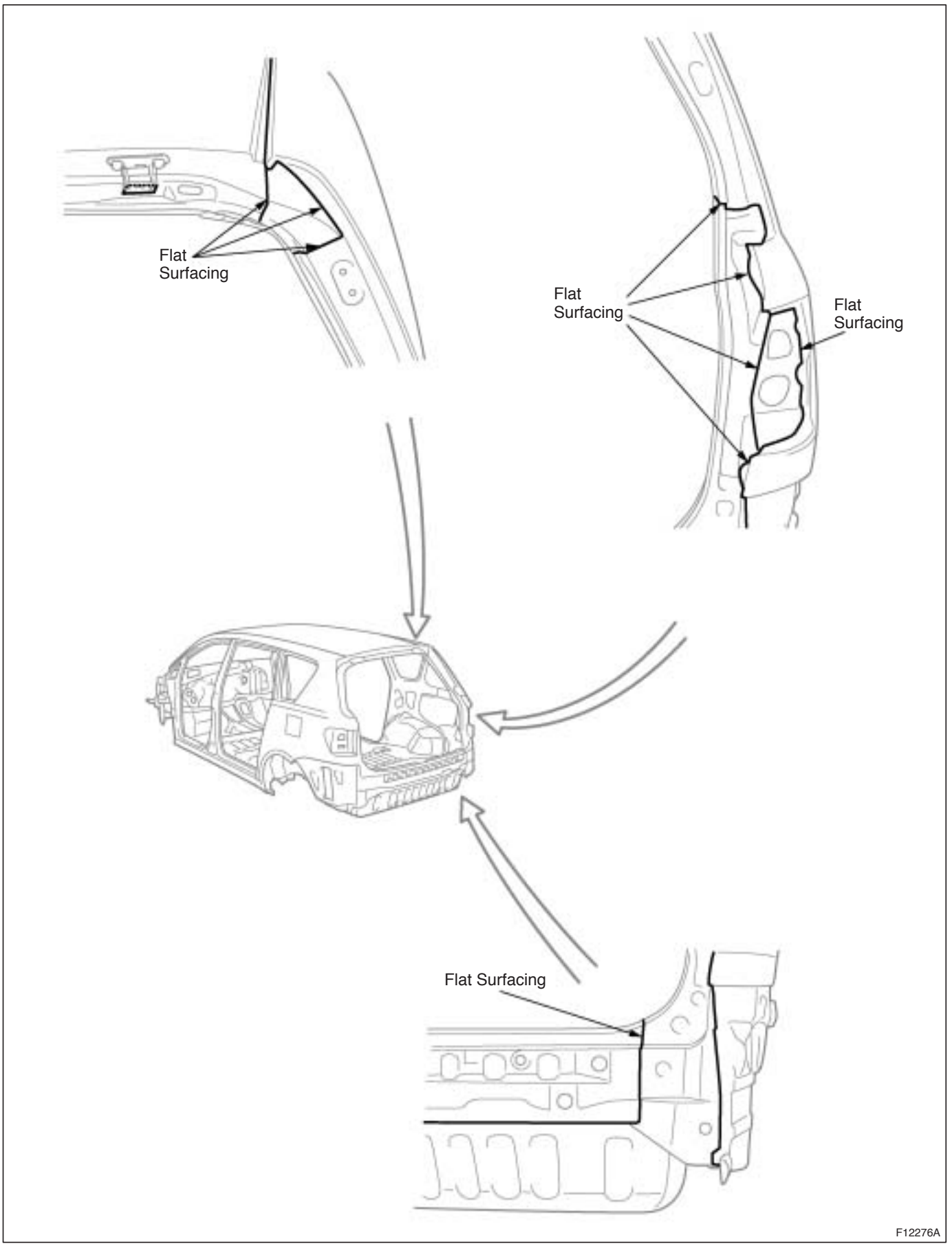

4. DOOR PARTS

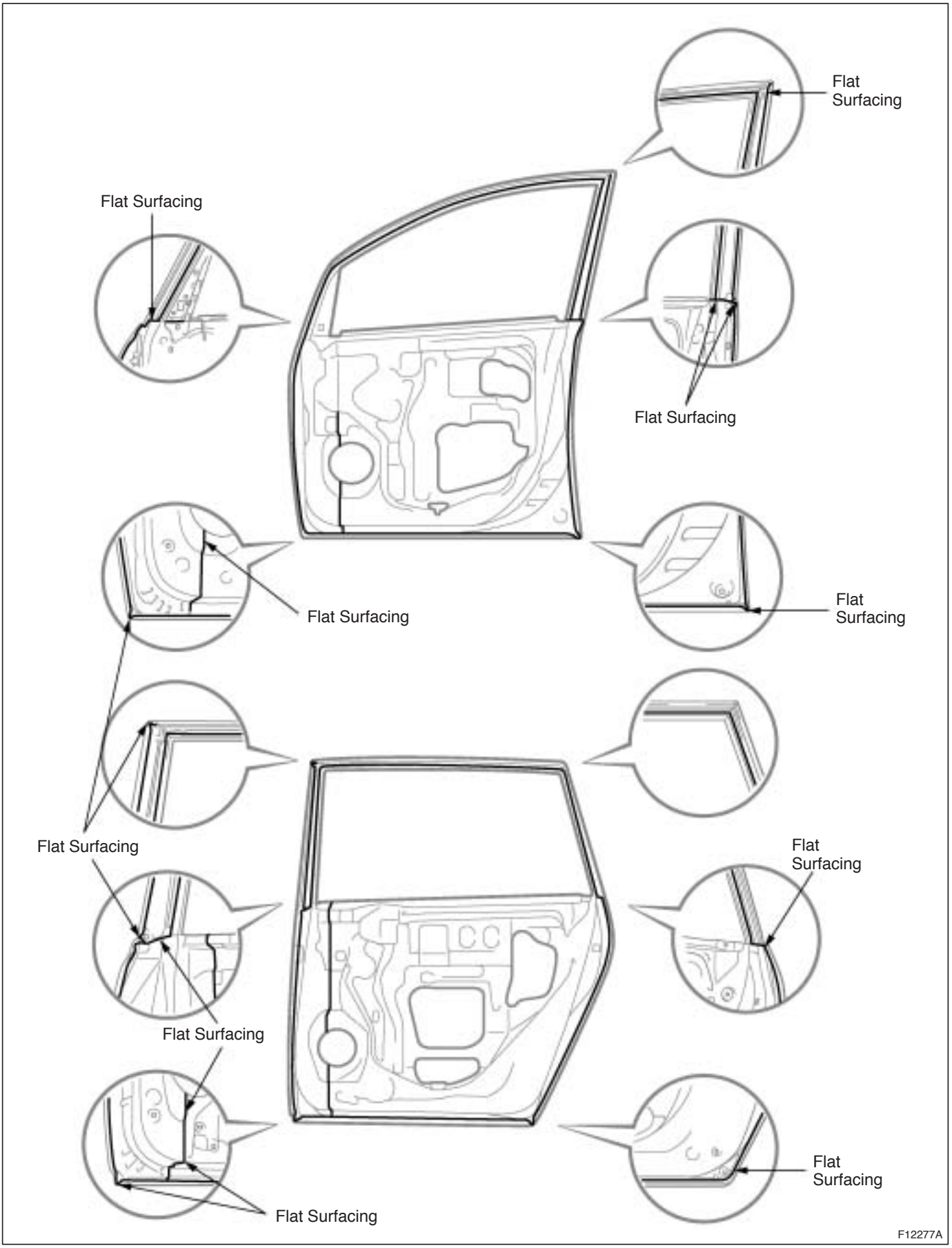
Flat Surfacing
Flat Surfacing
Flat Surfacing
Flat Surfacing
Flat Surfacing
Flat Surfacing
Flat Surfacing
Flat Surfacing
Flat Surfacing
Flat Surfacing
F12277A

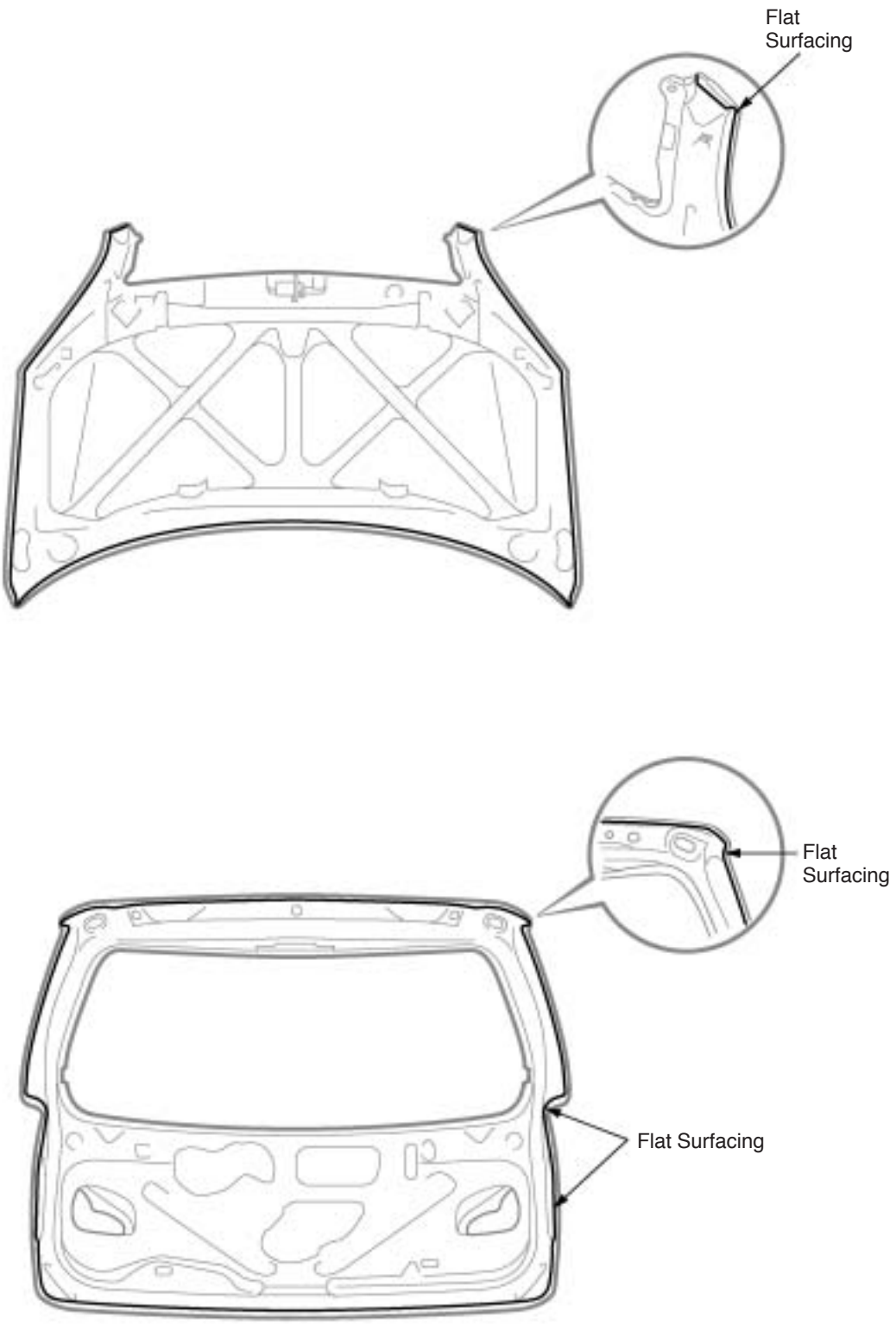
Flat
Surfacing
Flat
Surfacing
Flat Surfacing
F12278A

BODY PANEL UNDERCOATING AREAS

HINT:

1. First wipe off any dirt, grease or oil with a rag soaked in a grease, wax and silicone remover.
2. Cover the surrounding areas with masking paper to avoid coating unnecessary areas. If other areas are accidently coated, wipe off the coating immediately.
3. Apply the first coating of undercoat to all welded areas and panel joints, then apply as second coat over the entire area.
4. Do not coat parts which become hot, such as the tailpipe, or moving parts, such as the propeller shaft.
5. Besides the locations described below, apply undercoating to all weld points under the body to insure corrosion prevention.
6. Be sure to seal the edge of the flange of the member and bracket with undercoating.
7. If undercoat is damaged by peeling, crackes, etc., be sure to repair as necessary.
8. Before the undercoat apply sealer allowing rust prevention to be attained.

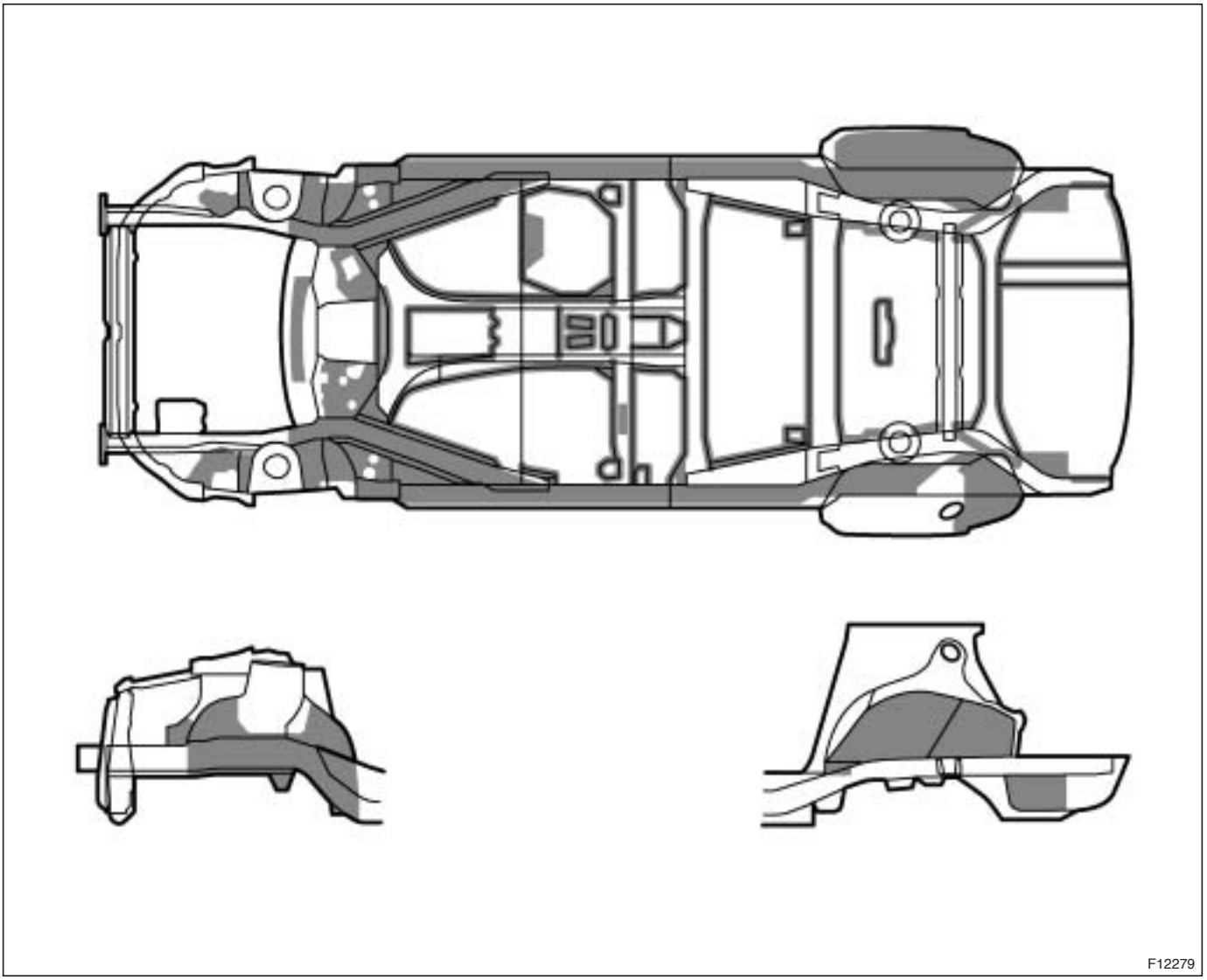

REFERENCE: Referring to the notes above, undercoating should be applied according to the specifications for your country.

BODY PANEL ANTI-RUST AGENT (WAX) APPLICATION AREAS

HINT:

1. Whenever adjusting the doors and hoods, apply anti-rust agent (wax) around the hinges.
2. Even if partially repairing a part, apply anti-rust agent (wax) over the entire application area of the part.
3. Wipe off the anti-rust agent immediately with a rag soaked in a grease, wax and silicone remover, if accidently applied to other areas.

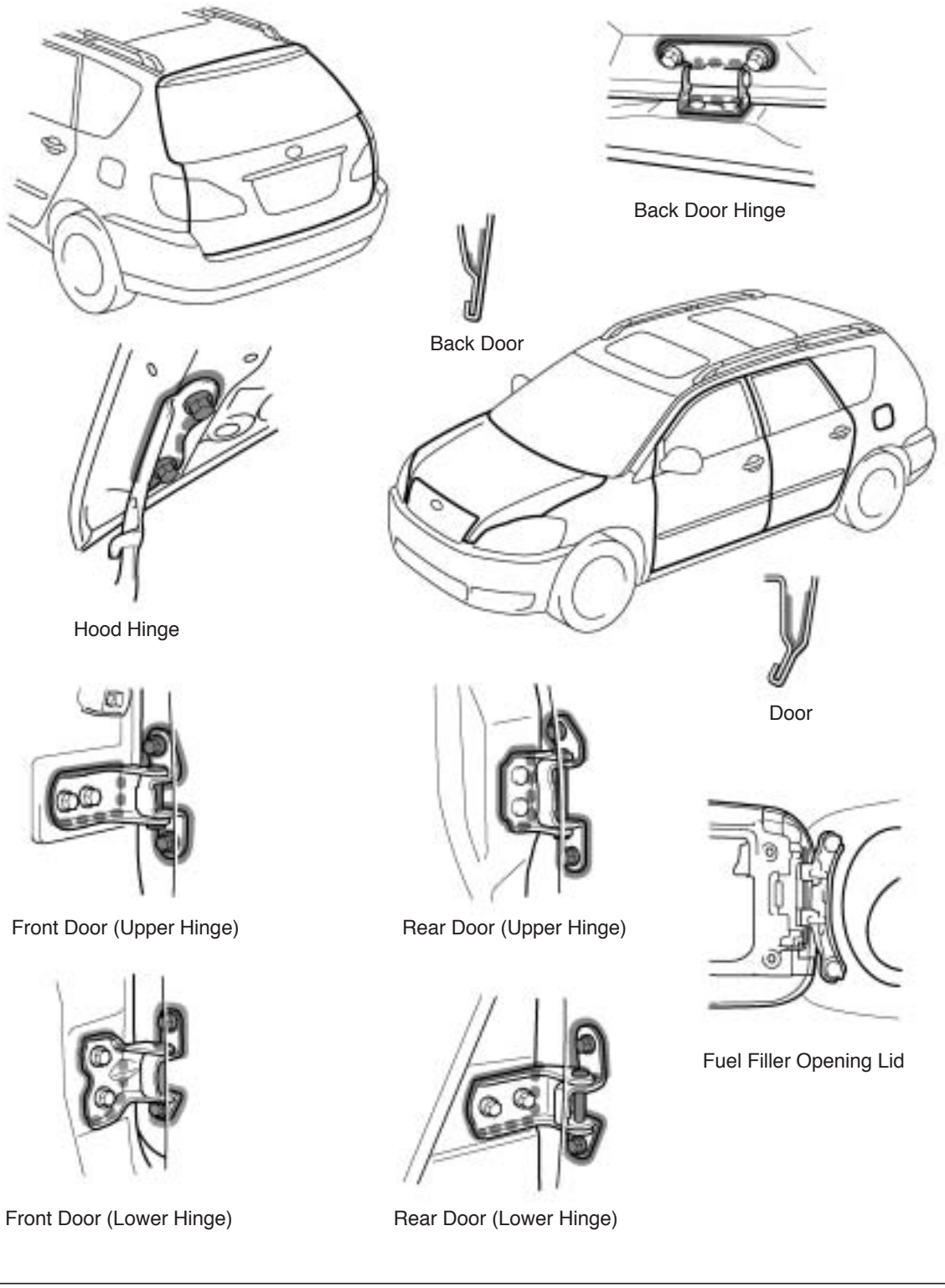

FOAMED MATERIAL APPLICATION AREAS

The sections shown in the figure below are filled with foamed material to provide noise insulation. After repairing these sections or their peripheries, refill with foamed materials.

HINT:

1. Use the service holes located on the reverse side of the body panel to refill with foamed materials.
2. When handling foamed material, follow the directions of the material's manufacturer.

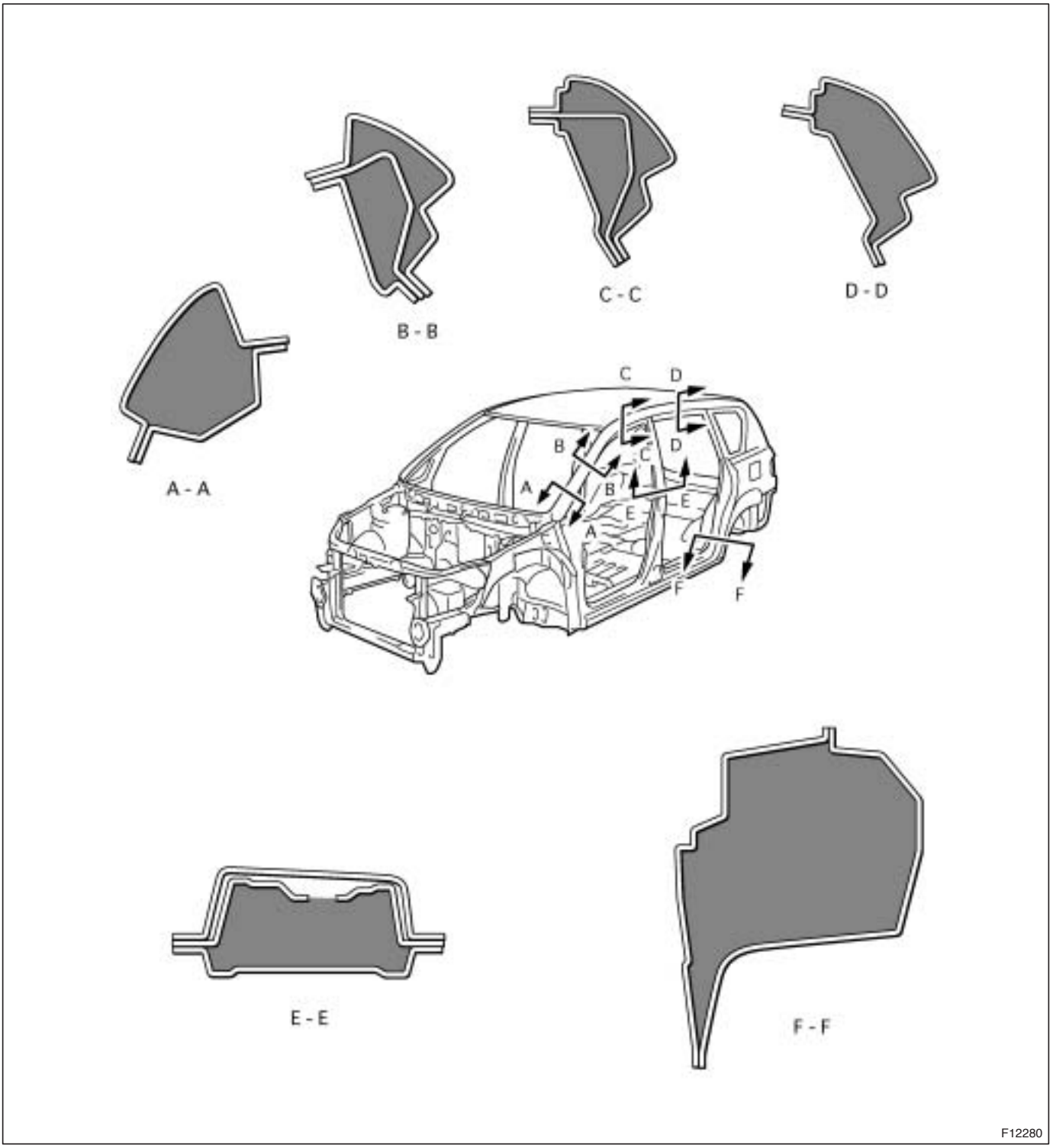

SILENCER SHEET INSTALLATION AREAS

HINT:
The floor silencer in this vehicle is a non-adhesive type.

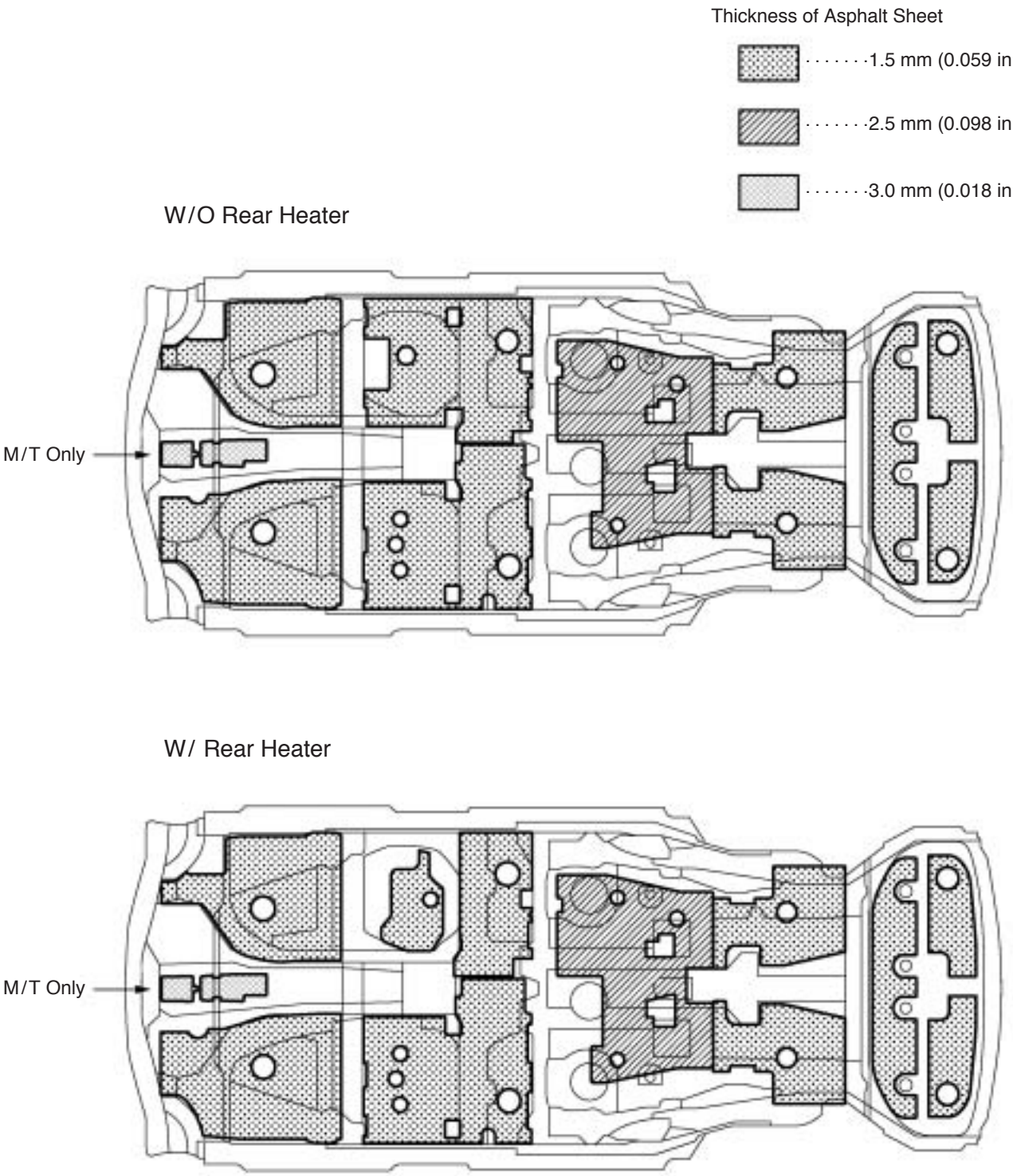

BODY PANEL ANTI-CHIPPING PAINT APPLICATION AREAS

HINT:

1. Anti-chipping paint should be applide to some areas before the second coat and to others after the top coat.
2. If other areas are accidentally coated, wipe of the paintimmediately with a rag soaked in grease, wax and silicone remover.

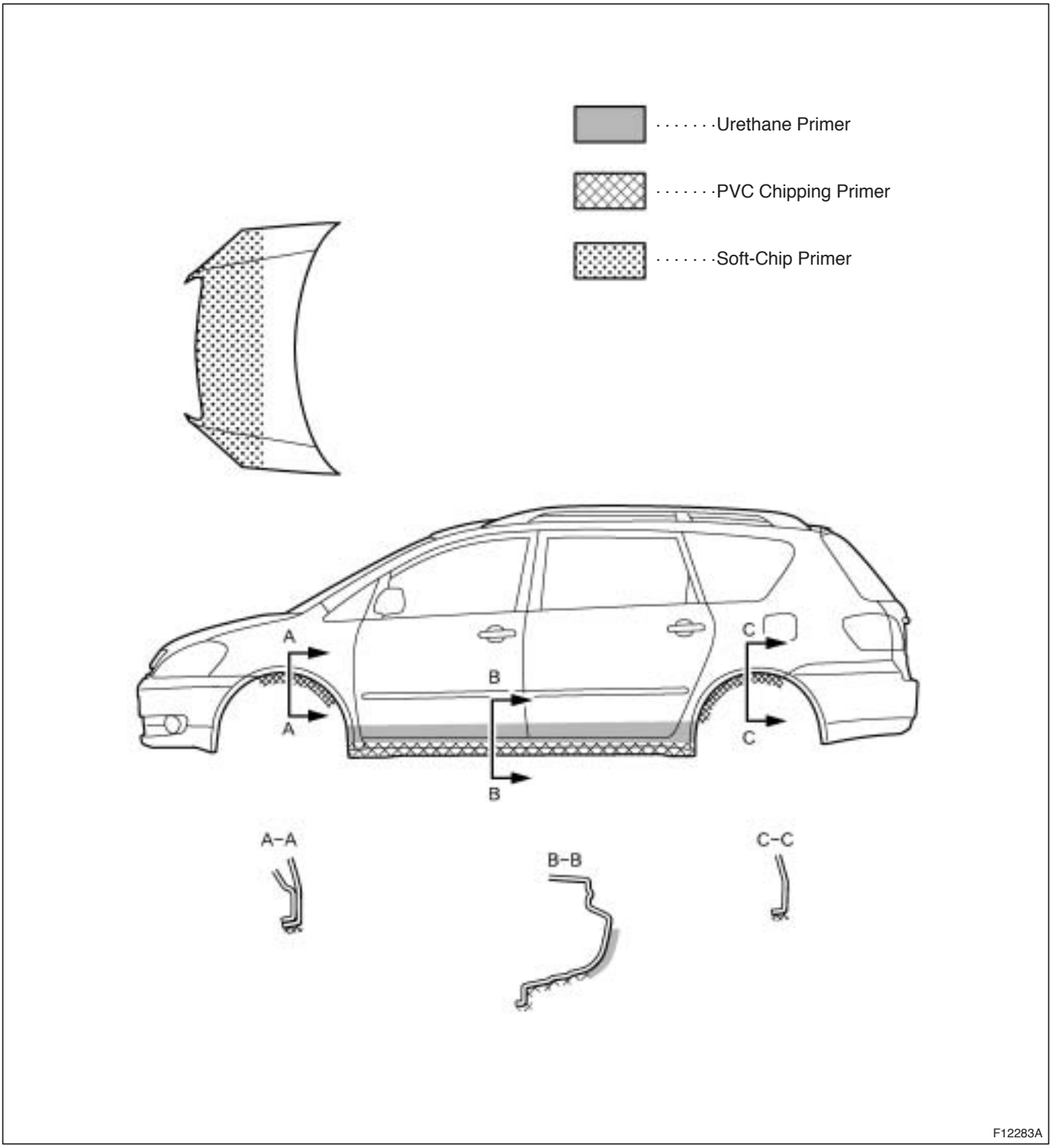

GENERAL REPAIR INSTRUCTIONS

1. WORK PRECAUTIONS

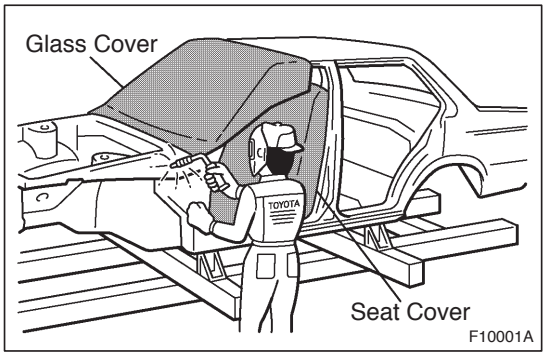

(a) VEHICLE PROTECTION

(1) When welding, protect the painted surfaces, windows, seats and carpet with heat resistant, fire-proof covers.

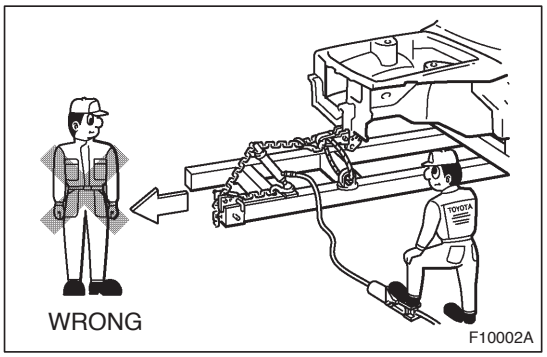

(b) SAFETY

(1) Never stand in direct line with the chain when using a puller on the body or frame, and be sure to attach a safety cable.

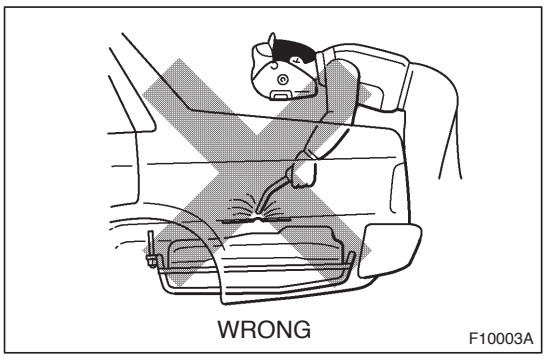

(2) Before performing repair work, check for fuel leaks. If a leak is found, be sure to close the opening totally.

(3) If it is necessary to use a flame in the area of the fuel tank, first remove the tank and plug the fuel line.

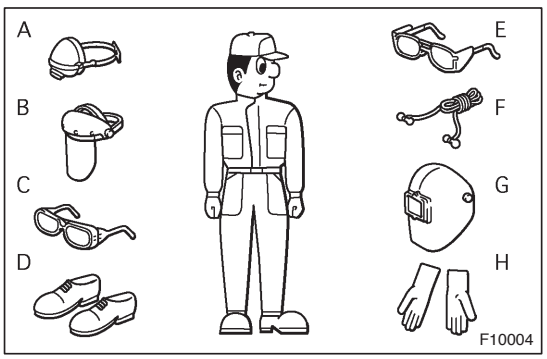

(c) SAFETY WORK CLOTHES

(1) In addition to the usual mechanic's wear, cap and safety shoes, the appropriate gloves, head protector, glasses, ear plugs, face protector, dust-prevention mask, etc. should be worn as the situation demands.

Code	Name
A	Dust-Prevention Mask
B	Face Protector
C	Eye Protector
D	Safety Shoes
E	Welder's Glasses
F	Ear Plugs
G	Head Protector
H	Welder's Gloves

2. HANDLING PRECAUTIONS OF PLASTIC BODY PARTS

(1) The repair procedure for plastic body parts must conform with the type of plastic material.

(2) Plastic body parts are identified by the codes in the following table.

(3) When repairing metal body parts adjoining plastic body parts (by brazing, frame cutting, welding, painting etc.), consideration must be given to the property of the plastic.

Code	Material name	Heat* resistant temperature limit °C (°F)	Resistance to alcohol or gasoline	Notes
AAS	Acrylonitrile Acrylic Styrene	80 (176)	Alcohol is harmless if applied only for short time in small amounts (e.g., quick wiping to remove grease).	Avoid gasoline and organic or aromatic solvents.
ABS	Acrylonitrile Butadiene Styrene	80 (176)	Alcohol is harmless if applied only for short time in small amounts (e.g., quick wiping to remove grease).	Avoid gasoline and organic or aromatic solvents.
AES	Acylonitrile Ethylene Styrene	80 (176)	Alcohol is harmless if applied only for short time in small amounts (e.g., quick wiping to remove grease).	Avoid gasoline and organic or aromatic solvents.
ASA	Acrylonitrile Styrene Acrylate	80 (176)	Alcohol is harmless if applied only for short time in small amounts (e.g., quick wiping to remove grease).	Avoid gasoline and organic or aromatic solvents.
CAB	Cellulose Acetate	80 (176)	Alcohol is harmless if applied only for short time in small amounts (e.g., quick wiping to remove grease).	Avoid gasoline and organic or aromatic solvents.
EPDM	Ethylene Propylene	100 (212)	Alcohol is harmless. Gasoline is harmless if applied only for short time in small amounts.	Most solvents are harmless but avoid dipping in gasoline, solvents, etc.
FRP	Fiber Reinforced Plastics	180 (356)	Alcohol and gasoline are harmless.	Avoid alkali.
EVA	Ethylene Acetate	70 (158)	Alcohol is harmless if applid only for short time in small amounts (e.g., quick wiping to remove grease).	Avoid gasoline and organic or aromatic solvents.
PA	Polyamide (Nylon)	80 (176)	Alcohol and gasoline are harmless.	Avoid battery acid.
PBT	Polybutylene Terephthalate	160 (320)	Alcohol and gasoline are harmless.	Most solvents are harmless.
PC	Polycarbonate	120 (248)	Alcohol is harmless.	Avoid gasoline brake fluid, wax, wax removers and organic solvents. Avoid alkali.

*Temperatures higher than those listed here may result in material deformation during repair.

Code	Material name	Heat* resistant temperature limit °C (°F)	Resistance to alcohol or gasoline	Notes
PE	Polyethylene	80 (176)	Alcohol and gasoline are harmless.	Most solvents are harmless.
PET	Polyethylene Terephthalate	75 (167)	Alcohol and gasoline are harmless.	Avoid dipping in water.
PMMA	Polymethyl Methacrylate	80 (176)	Alcohol is harmless if applied only for short time in small amounts.	Avoid dipping or immersing in alcohol, gasoline, solvents, etc.
POM	Polyoxymethylene (Polyacetal)	100 (212)	Alcohol and gasoline are harmless.	Most solvents are harmless.
PP	Polypropylene	80 (176)	Alcohol and gasoline are harmless.	Most solvents are harmless.
PPO	Modified Polyphenylene Oxide	100 (212)	Alcohol is harmless.	Gasoline is harmless if applied only for quick wiping to remove grease.
PS	Polystyrene	60 (140)	Alcohol and gasoline are harmless if applied only for short time in small amounts.	Avoid dipping or immersing in alcohol, gasoline, solvents, etc.
PUR	Polyurethane	80 (176)	Alcohol is harmless if applied only for very short time in small amounts (e.g., quick wiping to remove grease).	Avoid dipping or immersing in alcohol, gasoline, solvents, etc.
PVC	Polyvinylchloride (Vinyl)	80 (176)	Alcohol and gasoline are harmless if applied only for short time in small amounts (e.g., quick wiping to remove grease).	Avoid dipping or immersing in alcohol, gasoline, solvents, etc.
SAN	Styrene Acrylonitrile	80 (176)	Alcohol is harmless if applied only for short time in small amounts (e.g., quick wiping to remove grease).	Avoid dipping or immersing in alcohol, gasoline, solvents etc.
TPO	Thermoplastic Olefine	80 (176)	Alcohol is harmless. Gasoline is harmless if applied only for short time in small amounts.	Most solvents are harmless but avoid dipping in gasoline, solvents, etc.
TPU	Thermoplastic Polyurethane	80 (176)	Alcohol is harmless if applied only for short time in small amounts (e.g., quick wiping to remove grease).	Avoid dipping or immersing in alcohol, gasoline, solvents, etc.
TSOP	TOYOTA Super Olefine Polymer	80 (176)	Alcohol and gasoline are harmless.	Most solvents are harmless.
UP	Unsaturated Polyester	110 (233)	Alcohol and gasoline are harmless.	Avoid alkali.

*Temperatures higher than those listed here may result in material deformation during repair.

3. LOCATION OF PLASTIC BODY PARTS

Parts Name	Code
Radiator Grille	ABS
Front Bumper Cover	TSOP
Side Turn Signal Light	SAN/ABS
Outer Rear View Mirror	AAS/ABS·PA
Front Door Outside Handle	PC/PBT·PA
Front Door Outside Moulding	PVC
Rear Door Outside Handle	PC·PBT·PA
Rear Door Outside Moulding	PVC
Side Mudguard Front	TSOP
Side Mudguard	TSOP
Rear Combination Light	PMMA·ASA
Rear Light	ABS
Back Door Outside Garnish	ABS
License Plate Light	PC
Rear Spoiler	ABS
Reflex Reflector	PMMA/ABS
Rear Bumper Cover	TSOP

HINT:
- Resin material differs with model.

/ Made up of 2 or more kinds of materials.

HOW TO USE THIS MANUAL

1. BODY PANEL REPLACEMENT THIS MANUAL

BP–34

BODY PANEL REPLACEMENT

Ⓐ **QUARTER PANEL (CUT)**
REPLACEMENT

Ⓑ 1. REMOVE QUARTER PANEL
(a) Cut and join the part at the location as shown below.

Ⓒ

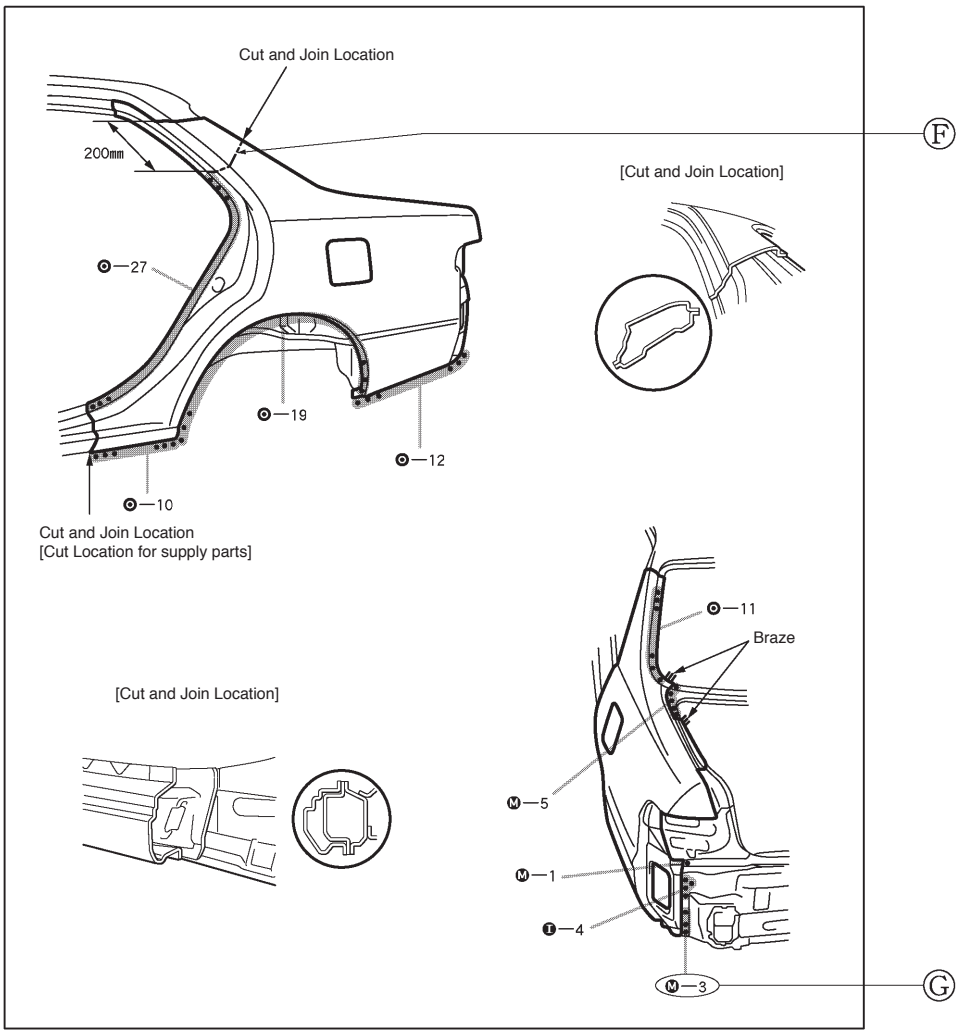

Ⓐ : **REPLACEMENT PARTS**
QUARTER PANEL (CUT)

Replacement method
(ASSY) . . . . Assembly replacement
(CUT) . . . . . Major cutting (less than 1/2 of parts used)
(CUT-H) . . . Half cutting (about 1/2 parts used)
(CUT-P) . . . Partial cutting (most of parts used)

Replacement Parts

Ⓑ : **REMOVAL DIAGRAM**
Describes in detail removal of the damaged parts involving repair by cutting.

Ⓒ : **REMOVAL GUIDE**
Provides additional information to more efficiently help you perform the removal.

F10113

BODY PANEL REPLACEMENT

2. INSTALL QUARTER PANEL

HINT:
Inspect the fitting of the rear door, luggage compartment door and rear combination light, etc., before welding, since this affects the appearance of the finish, (a) Before temporarily installing the new parts, apply body sealer to the wheel arch.

HINT:
• Apply body sealer about 5 mm (0.20 in.) from the flange, avoiding any oozing.
• Apply sealer evenly, about 3 – 4 mm (0.12 – 0.16 in.) in diameter.
• For other sealing points, refer to section PC.

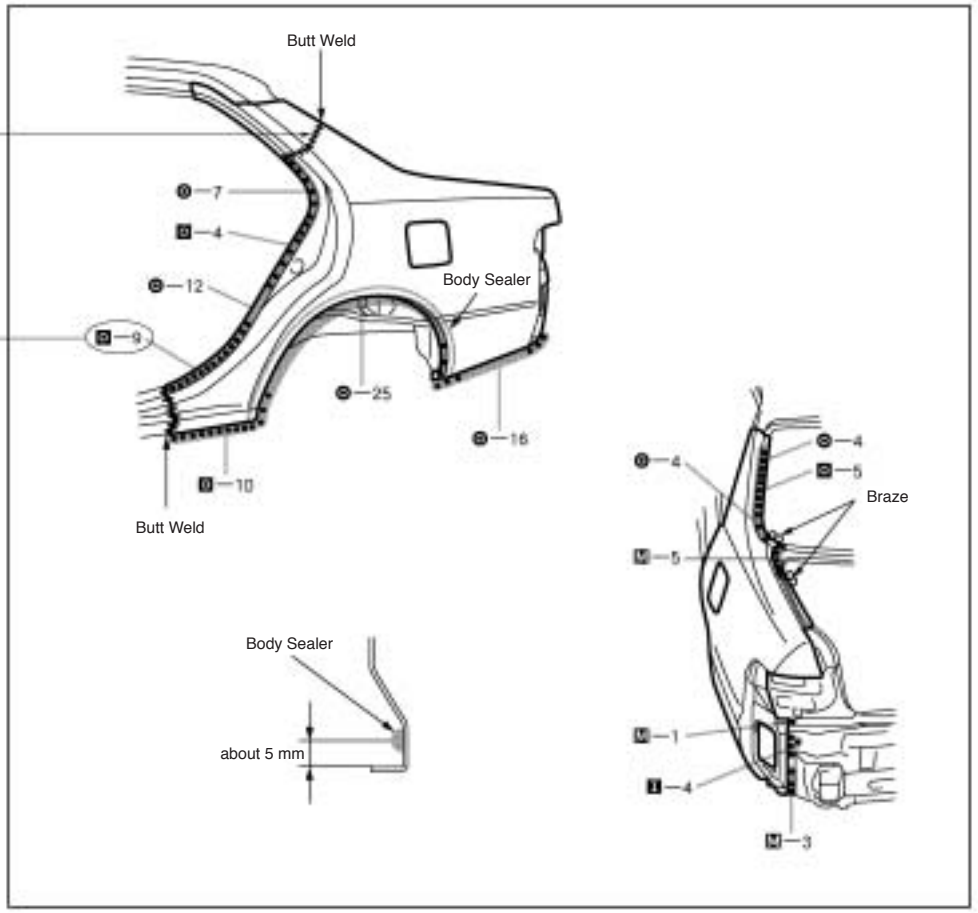

3. MEASURING THE OPENING PORTION DIMENSIONS (See page BP-XX)
4. APPLYING SEALER TO THE INSIDE OF THE VEHICLE (See page PC-XX)
5. APPLYING SEALER TO THE REAR, LUGGAGE COMPARTMENT (See page PC-XX)
6. CHARGING THE POLYURETHANE FOAM (See page PC-XX)
7. APPLYING ANTI-RUST AGENT

(a) After applying the top coat layer, apply the anti-rust agent to the inside of the necked section structural weld spots.

Ⓓ : **INSTALLATION GUIDE**
Provides additional information to more efficiently help you perform the installation.

Ⓔ : **INSTALLATION DIAGRAM**
Describes in detail installation of the new parts involving repair by welding and/or cutting, but excluding painting.

Ⓕ : **SYMBOLS**
See page SS-7.

Ⓖ : **ILLUSTRATION OF WELD POINTS**
Weld method and panel position symbols.
See page SS-8.

F10114A

2. SYMBOLS

The following symbols are used in the welding diagrams in section BP of this manual to indicate cutting areas and the types of weld required.

SYMBOLS	MEANING	ILLUSTRATION
	SAW CUT OR ROUGH CUT	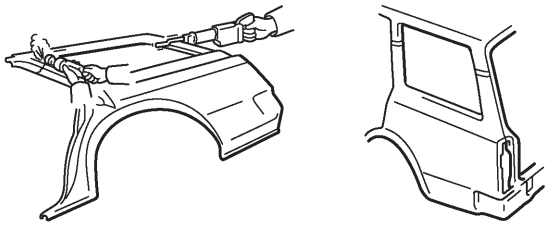
	REMOVE BRAZE	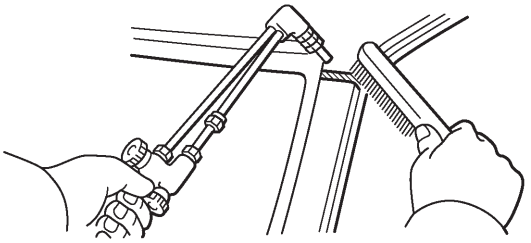
	WELD POINTS	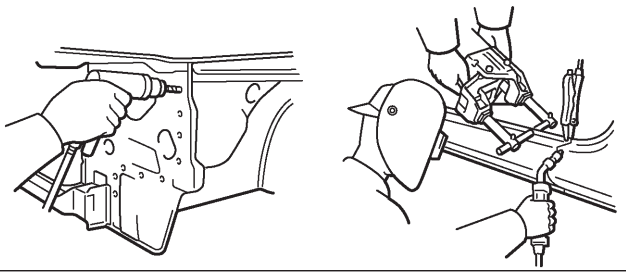
M I M I	SPOT WELD OR MIG PLUG WELD (See Page SS-8)	
	CONTINUOUS MIG WELD (BUTT WELD OR TACK WELD)	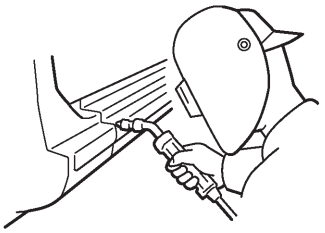
	BRAZE	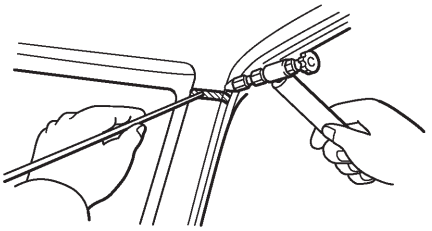
	BODY SEALER	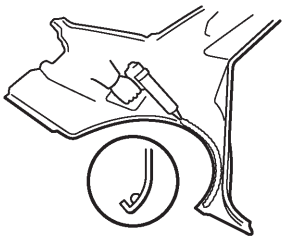

F10005A

3. ILLUSTRATION OF WELD POINT SYMBOLS

EXAMPLE:

REMOVAL

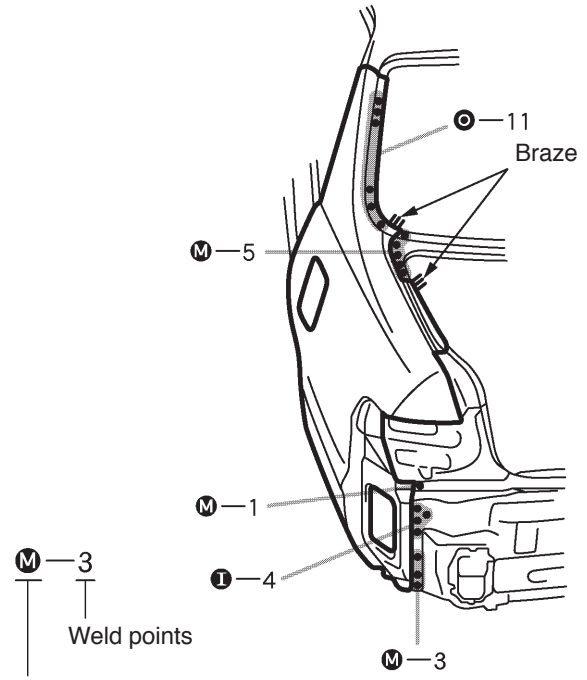

INSTALLATION

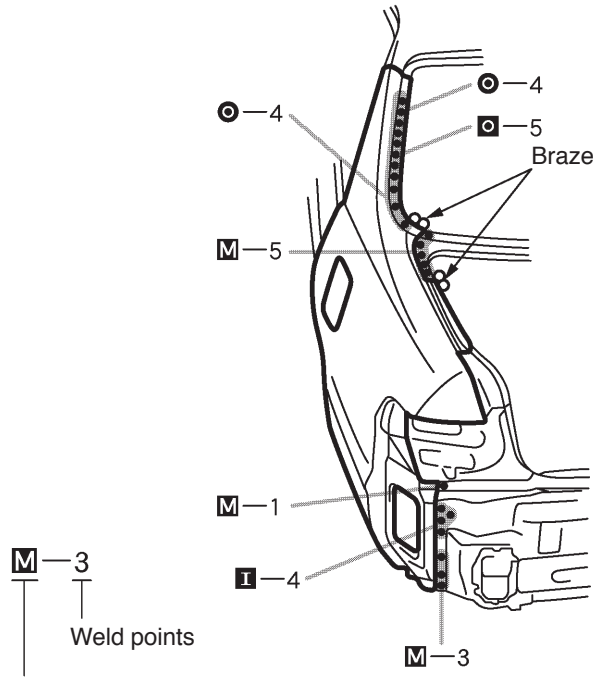

SYMBOL	MEANING	ILLUSTRATION
Ⓞ Ⓜ Ⓘ	Remove Weld Points	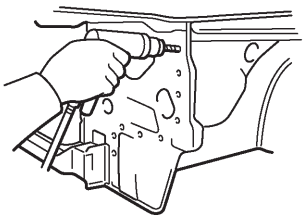
Ⓞ	(Outside)	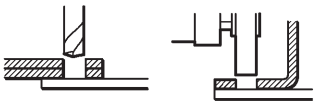
Ⓜ	(Middle)	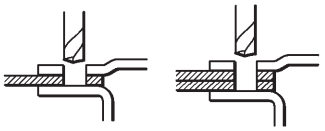
Ⓘ	(Inside)	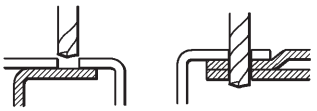

HINT: Panel position symbols are as seen from the working posture.

SYMBOL	MEANING	ILLUSTRATION
Ⓞ Ⓜ Ⓘ	Spot Weld	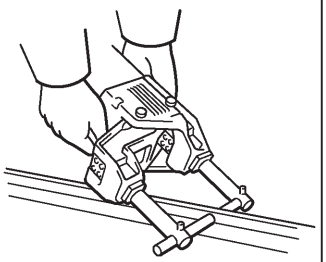
Ⓞ Ⓜ Ⓘ	MIG Plug Weld	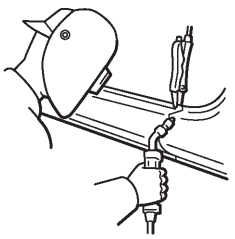
+	Spot MIG Weld	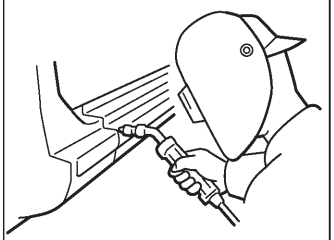

F10005A

PROPER AND EFFICIENT WORK PROCEDURES

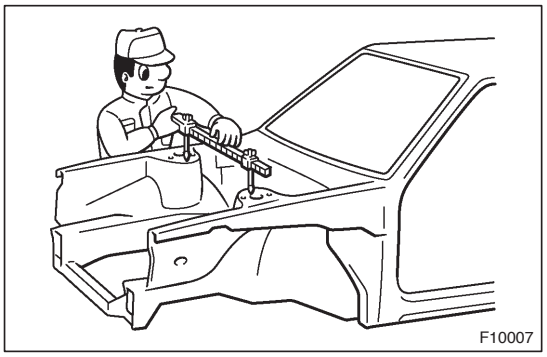
F10007

1. REMOVAL

(a) PRE-REMOVAL MEASURING

(1) Before removal or cutting operations, take measurements in accordance with the dimension diagram. Always use a puller to straighten a damaged body or frame.

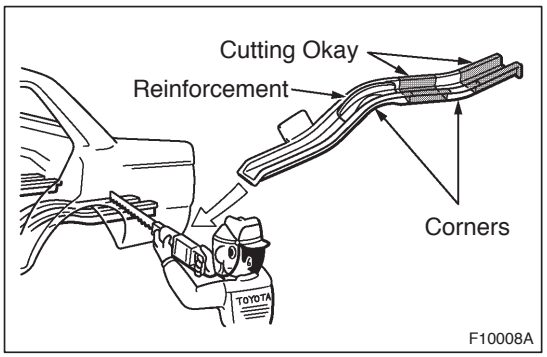

F10008A

(b) CUTTING AREA

(1) Always cut in a straight line and avoid reinforced area.

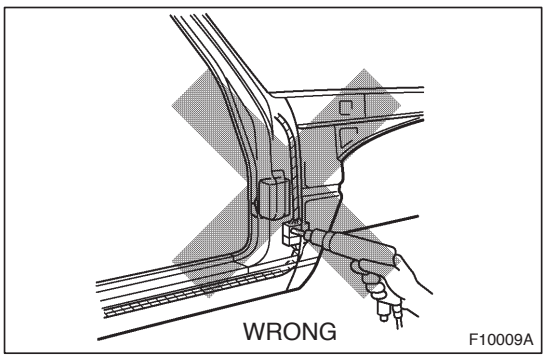

F10009A

(c) PRECAUTIONS FOR DRILLING OR CUTTING

(1) Check behind any area to be drilled or cut to insure that there are no hoses, wires, etc., that may be damaged.

HINT: See “Handling Precautions on Related Components” on page SS-14.

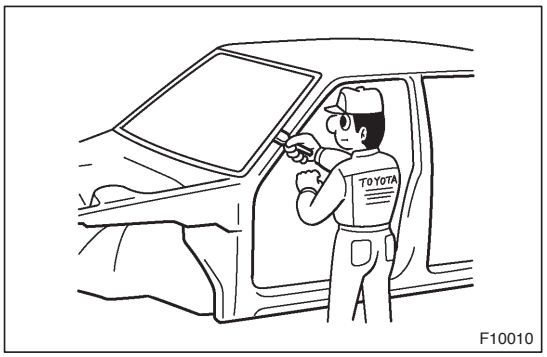

F10010

(d) REMOVAL OF ADJACENT COMPONENTS

(1) When removing adjacent components, apply protective tape to the surrounding body and your tools to prevent damage.

HINT: See “Handling Precautions on Related Components” on page SS-14.

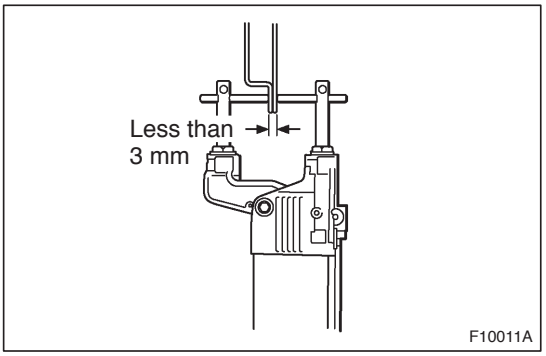

2. PREPARATION FOR INSTALLATION

(a) SPOT WELD POINTS

(1) When welding panels with a combined thickness of over 3 mm (0.12 in.), use a MIG (Metal Inert Gas) welder for plug welding.

HINT: Spot welding will not provide sufficient durability for panels over 3 mm (0.12 in.) thick.

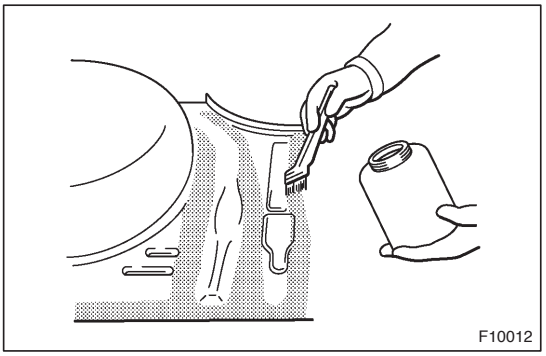

(b) APPLICATION OF WELD-THROUGH PRIMER (SPOT SEALER)

(1) Remove the paint from the portion of the new parts and body to be welded, and apply weld-through primer.

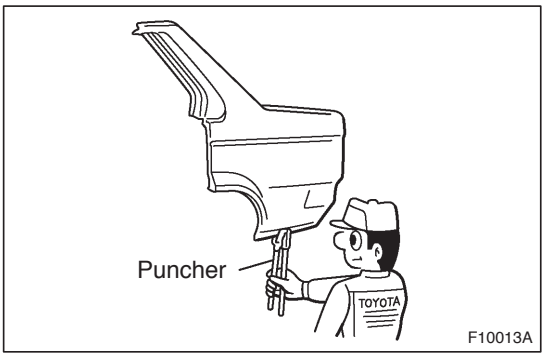

(c) MAKING HOLES FOR PLUG WELDING

(1) For areas where a spot welder cannot be used, use a puncher or drill to make holes for plug welding.

REFERENCE: mm (in.)

Thickness of welded portion	Size of plug hole
1.0 (0.04) under	5 (0.20) ø over
1.0 (0.04) – 1.5 (0.06)	6.4 (0.26) ø over
1.5 (0.06) over	8 (0.31) ø over

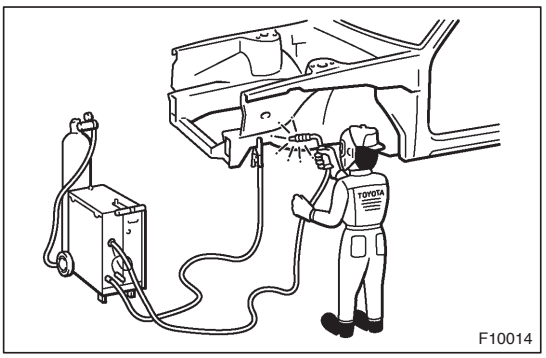

(d) SAFETY PRECAUTIONS FOR ELECTRICAL COMPONENTS

(1) When welding, there is a danger that electrical components will be damaged by the electrical current flowing through the body.

(2) Before starting work, disconnect the negative terminal of the battery and ground the welder near the welding location of the body.

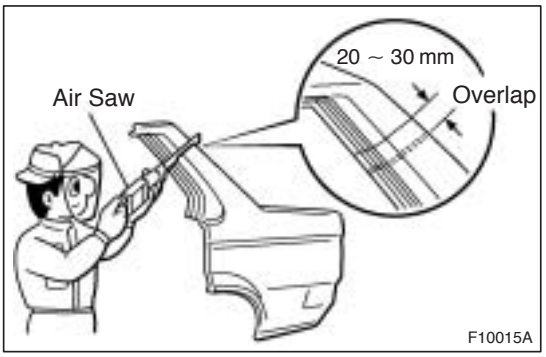

(e) ROUGH CUTTING OF JOINTS

(1) For joint areas, rough cut the new parts, leaving 20 – 30 mm (0.79 – 1.18 in.) overlap.

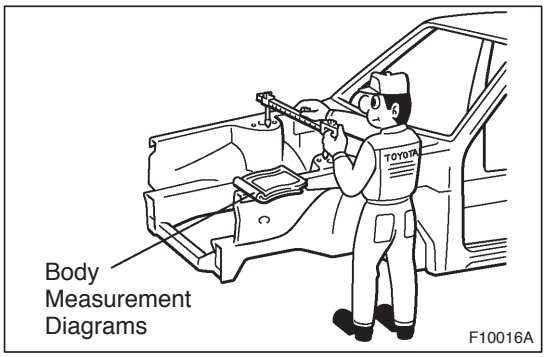

3. INSTALLATION

(a) PRE-WELDING MEASUREMENTS

(1) Always take measurements before installing underbody or engine components to insure correct assembly. After installation, confirm proper fit.

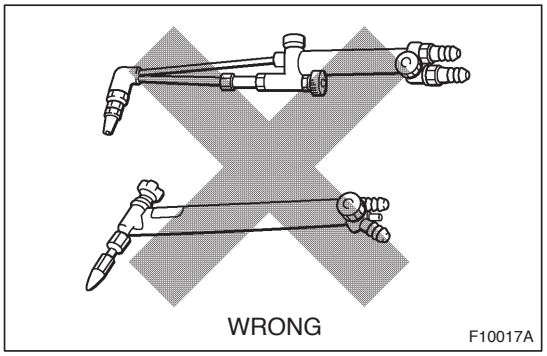

(b) WELDING PRECAUTIONS

(1) The number of welding spots should be as follows.

Spot weld: 1.3 X No. of manufacturer's spots.
Plug weld: More than No. of manufacturer's plugs.

(2) Plug welding should be done with a MIG (Metal Inert Gas) welder. Do not gas weld or braze panels at areas other than specified.

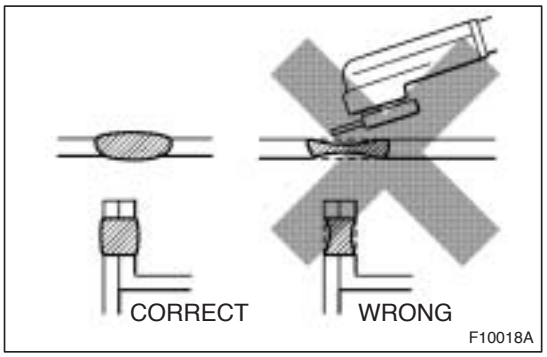

(c) POST-WELDING REFINISHING

(1) Always check the welded spots to insure they are secure.

(2) When smoothing out the weld spots with a disc grinder, be careful not to grind off too much as this would weaken the weld.

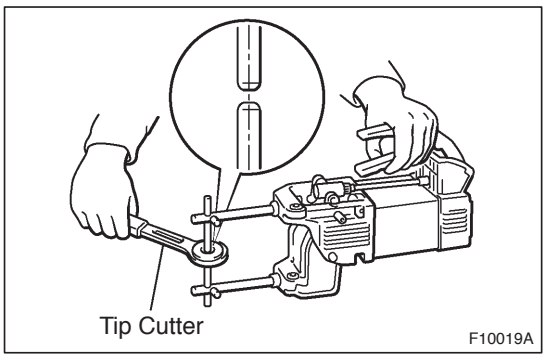

(d) SPOT WELD LOCATIONS

(1) Try to avoid welding over previous spots.

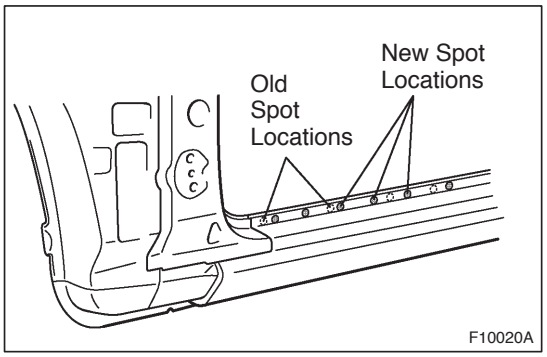

(e) SPOT WELDING PRECAUTIONS

(1) The shape of the welding tip point has an effect on the strength of the weld.

(2) Always insure that the seams and welding tip are free of paint.

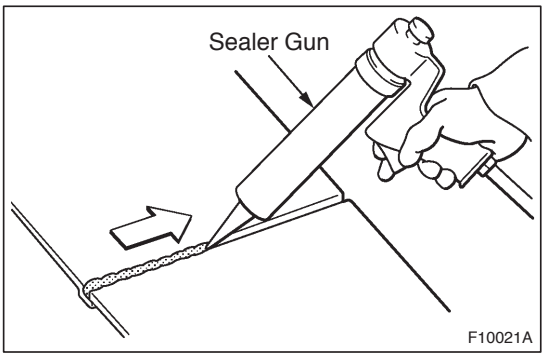

4. ANTI-RUST TREATMENT

(a) BODY SEALER APPLICATION

(1) For water-proofing and anti-corrosion measures, always apply the body sealer to the body panel seams and hems of the doors, hoods, etc.

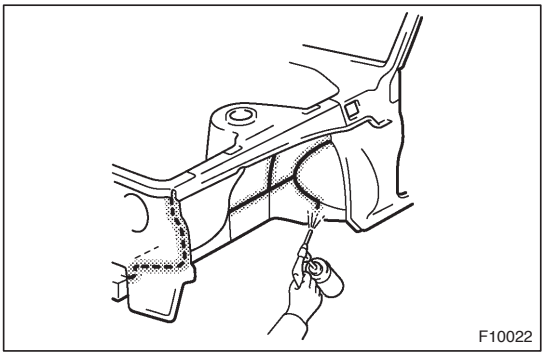

(b) UNDERCOAT APPLICATION

(1) To prevent corrosion and protect the body from damage by flying stones, always apply sufficient undercoat to the bottom surface of the under body and inside of the wheel housings.

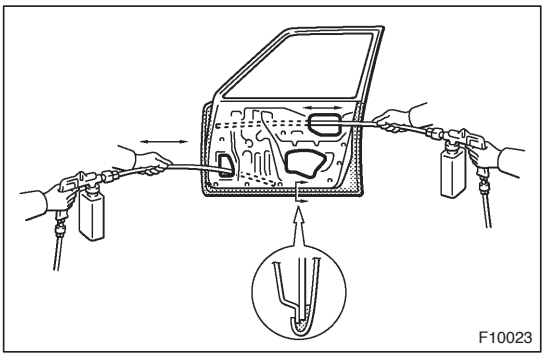

5. ANTI-RUST TREATMENT AFTER PAINTING PROCESS

(a) ANTI-RUST AGENT (WAX) APPLICATION

(1) To preserve impossible to paint areas from corrosion, always apply sufficient anti-rust agent (wax) to the inside of the hemming areas of the doors and hoods, and around the hinges, or the welded surfaces inside the boxed cross-section structure of the side member, body pillar, etc.

6. ANTI-RUST TREATMENT BY PAINTING

REFERENCE:

Painting prevents corrosion and protect the sheet metal from damage. In this section, anti-chipping paint only for anti-corrosion purpose is described.

(a) ANTI-CHIPPING PAINT

(1) To prevent corrosion and protect the body from damage by flying stones, etc., apply anti-chipping paint to the rocker panel, wheel arch areas, balance panel, etc.

HINT:
Depending on the model or the application area, there are cases where the application of anti-chipping paint is necessary before the second coat or after the top coat.

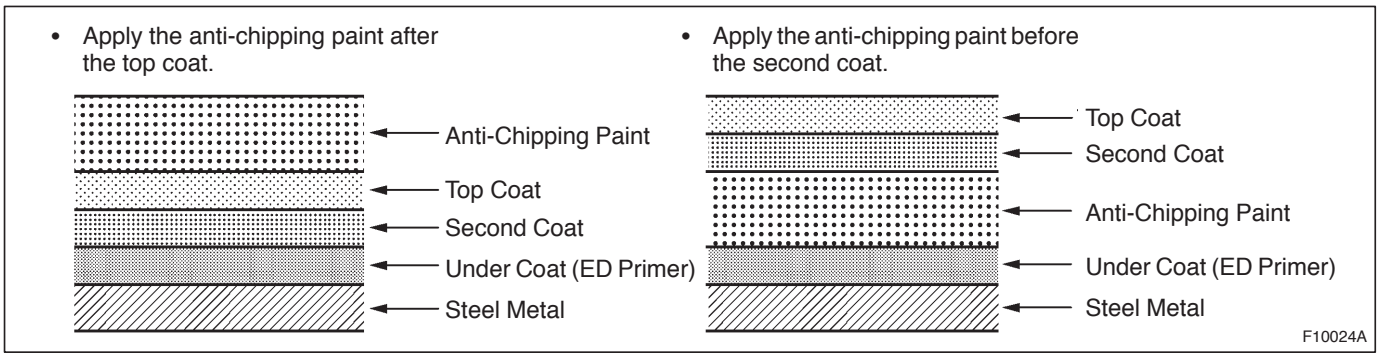

HANDLING PRECAUTIONS ON RELATED COMPONENTS

1. BRAKE SYSTEM

The brake system is one of the most important safety components. Always follow the directions and notes given in section BR of the repair manual for the relevant model year when handling brake system parts.

NOTICE: When repairing the brake master cylinder or TRAC system, bleed the air out of the TRAC system.

2. DRIVE TRAIN AND CHASSIS

The drive train and chassis are components that can have great effects on the running performance and vibration resistance of the vehicle. After installing components in the sections listed in the table below, perform alignments to ensure correct mounting angles and dimensions. Particularly accurate repair of the body must also be done to ensure correct alignment.

HINT: Correct procedures and special tools are required for alignment. Always follow the directions given in the repair manual for the relevant model during alignment and section DI of this manual.

Component to be aligned	Section of repair manual for relevant model
Front Wheels	Front Suspension (26) section
Rear Wheels	Rear Suspension (27) section

3. COMPONENTS ADJACENT TO THE BODY PANELS

Various types of component parts are mounted directly on or adjacently to the body panels. Strictly observe the following precautions to prevent damaging these components and the body panels during handling.

- Before repairing the body panels, remove their components or apply protective covers over the components.
- Before prying components off using a screwdriver or a scraper, etc., attach protective tape to the tool tip or blade to prevent damaging the components and the body paint.
- Before removing components from the outer surface of the body, attach protective tape to the body to ensure no damage to painted areas.

  HINT: Apply touch-up paint to any damaged paint surfaces.
- Before drilling or cutting sections, make sure that there are no wires, etc. on the reverse side.

4. ECU (ELECTRONIC CONTROL UNIT)

Many ECUs are mounted in this vehicle.
Take the following precautions during body repair to prevent damage to the ECUs.

- Before starting electric welding operations, disconnect the negative (–) terminal cable from the battery.
  When the negative (–) terminal cable is disconnected from the battery, memory of the clock and audio systems will be cancelled. So before starting work, make a record of the contents memorized by each memory system. Then when work is finished, reset the clock and audio systems as before.
  When the vehicle has tilt and telescopic steering, power seat and outside rear view mirror, which are all equipped with memory function, it is not possible to make a record of the memory contents.
  So when the operation is finished, it will be necessary to explain this fact to the customer, and request the customer to adjust the features and reset the memory.
- Do not expose the ECUs to ambient temperatures above 80°C (176°F).

  NOTICE: If it is possible the ambient temperature may reach 80°C (176°F) or more, remove the ECUs from the vehicle before starting work.
- Be careful not to drop the ECUs and not to apply physical shocks to them.

PRECAUTIONS FOR REPAIRING BODY STRUCTURE PANELS

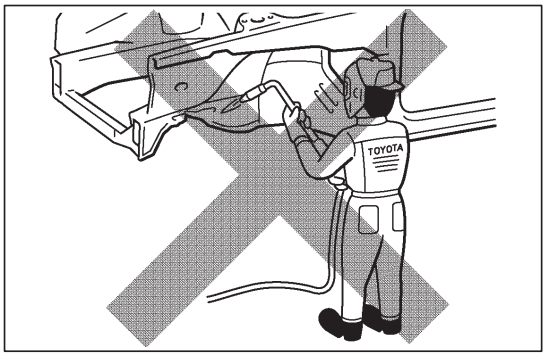

1. HEAT REPAIR FOR BODY STRUCTURE PANELS

Toyota prohibits the use of the heat repair method on body structure panels when repairing a vehicle damaged in a collision.

Panels that have high strength and rigidity, as well as a long life span for the automobile body are being sought after.

At Toyota, in order to fulfill these requirement, we use high tensile strength steel sheets and rust preventive steel sheets on the body.

High tensile steel sheets are made with alloy additives and a special heat treatment in order to improve the strength.

To prevent the occurrence of rust for a long period of time, the surface of the steel is coated with a zinc alloy.

If a body structure parts are heat repaired with an acetylene torch or other heating source, the crystalline organization of the steel sheet will change and the strength of the steel sheet will be reduced.

The ability of the body to resist rust is significantly lowered as well since the rust resistant zinc coating is destroyed by heat and the steel sheet surface is oxidized.

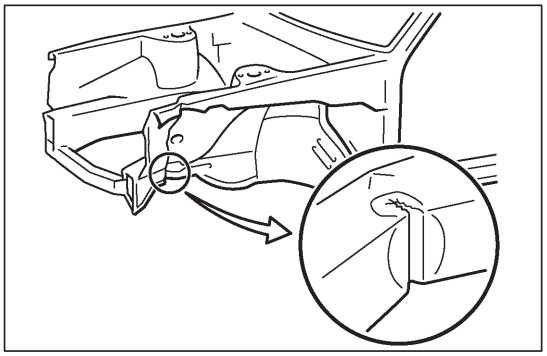

2. STRUCTURE PANEL KINKS

A sharp deformation angle on the panel that cannot be returned to its original shape by pulling or hammering is called a kink.

Since structure parts were designed to exhibit a 100% performance when they were in their original shape, if they are deformed in an accident, or if the deformed parts are repaired and reused, they become unable to exhibit the same performance as intended in the design.

It is necessary to replace the part where the kink has occurred.

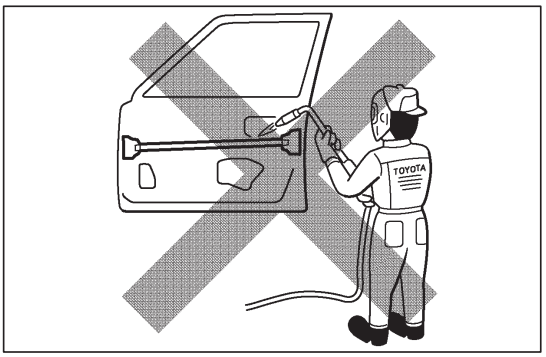

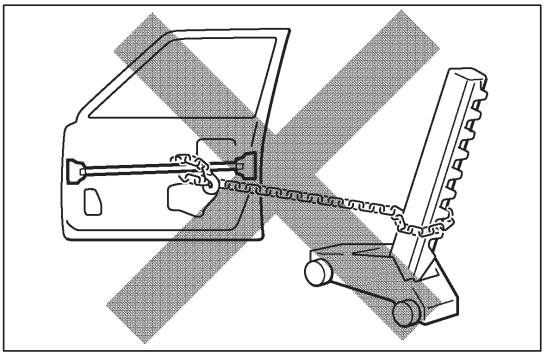

3. IMPACT BEAM REPAIR

The impact beam and bracket are necessary and important parts in maintaining a survival space for passengers in a side collision.

For impact beam, we use special high tensile strength steel.

The high tensile strength steel maintains its special crystalline organization by heat treatment or alloy additives.

Since these parts were designed to exhibit a 100% performance when they were in their original shape, if they are deformed in an accident, or if the deformed parts are repaired and reused, they become unable to exhibit the same performance as intended in the design.

It is necessary to replace the door assembly when impact beam or bracket is damaged.

ABBREVIATIONS USED IN THIS MANUAL

For convenience, the following abbreviations are used in this manual.

ABS	Antilock Brake System
A/C	Air Conditioner
assy	assembly
ECT	Electronic Controlled Transmission
ECU	Electronic Control Unit
e.g.	Exempli Gratia (for Example)
Ex.	Except
FWD	Front Wheel Drive Vehicles
4WD	Four Wheel Drive Vehicles
in.	inch
LH	Left-hand
LHD	Left-hand Drive
MIG	Metal Inert Gas
M/Y	Model Year
PPS	Progressive Power Steering
RH	Right-hand
RHD	Right-hand Drive
SRS	Supplemental Restraint System
SSM	Special Service Materials
w/	with
w/o	without

MEMO